DIGITAL WORKSTATION

Tyros / TRS-MS01

MONITOR SPEAKER

SERVICE MANUAL

Tyros

TRS-MS01

■ **CONTENTS**

SPECIFICATIONS (Tyros) 3
SPECIFICATIONS (TRS-MS01) 5
PNANEL LAYOUT (Tyros) 6
PNANEL LAYOUT (TRS-MS01) 9
CIRCUIT BOARD LAYOUT (Tyros) 10
CIRCUIT BOARD LAYOUT (TRS-MS01) 13
DISASSEMBLY PROCEDURE (Tyros) 14
DISASSEMBLY PROCEDURE (TRS-MS01) 24
LSI PIN DISCRIPTION (Tyros) 26
IC BLOCK DIAGRAM (Tyros) 36
IC BLOCK DIAGRAM (TRS-MS01) 37
CIRCUIT BOARDS (Tyros) 38
CIRCUIT BOARDS (TRS-MS01) 62
TEST PROGRAM 65
SYSTEM RESET 73
MIDI IMPLEMENTATION CHART 74
MIDI DATA FORMAT 75
BLOCK DIAGRAM (TRS-MS01) 94
OVERALL CIRCUIT DIAGRAM (TRS-MS01) 95
PARTS LIST
BLOCK DIAGRAM (Tyros)
OVERALL CIRCUIT DIAGRAM (Tyros)

PK 001689

YAMAHA
HAMAMATSU, JAPAN

FT ① '02.10

SPECIFICATIONS (Tyros)

Sound Source:	AWM	
Keyboard:		
Keys	61 Keys (C1 ~ C6)	
Touch Response	Initial Touch/Aftertouch	
Polyphony:	128 Notes max	
Voices:		
Preset Voices	1185	403 voices (Normal: 393 + Mega: 10) + 10 Organ Flutes voices + 480 XG voices + 256 GM2 voices + 31 drum kits (XG and Panel: 22 + GM2: 9) + 5 SFX kits
User Voices (created with Sound Creator function)	Maximum number is unlimited; depends solely on the capacity of the USER/FD/HD drives. *	Created data can be saved to the USER/FD/HD drive.
Custom Voices (created with Voice Editor software)	Normal Voice: 128 max	Maximum number varies according to the type of voice created and the way in which it was created or edited. For example, if only Live! GrandPiano voices are saved as Custom voices, up to 94 voices can be saved.
	Drum Voice: 10 max	Maximum number varies according to the type of voice created and the way in which it was created or edited. For example, if only Live! StandardKit voices are saved as Custom voices, up to 10 voices can be saved.
Organ Flutes	10 Preset	Created data can be saved to USER/FD/HD drive.
Orchestration:		
Upper	3 parts	RIGHT1, RIGHT2, RIGHT3
Lower	1 parts	Includes LEFT HOLD function.
Split Point (Left)	F#2	Can be set and memorized.
Split Point (Style)	F#2	Can be set and memorized.
Effects:		
Reverb	34 Preset + 3 User	1 block; parameters including depth can be edited.
Chorus	26 Preset + 3 User	1 block; parameters including depth can be edited.
DSP Effect	183 Preset + 3 User	1 block for style and song; parameters including depth can be edited.
DSP Effects	183 Preset + 10 User	4 blocks for RIGHT1, 2, 3, and LEFT; parameters in cluding depth can be edited.
DSP Effect	183 Preset + 10 User	1 block for microphone; parameters including depth can be edited.
DSP Variation	(Available)	4 blocks for RIGHT1, 2, 3, and LEFT
Poly/Mono	(Available)	When set to MONO, the Portamento Time can be set.
Vocal Harmony	60 Preset + 10 User	3 notes polyphony; parameters including balance can be edited.
Microphone Effect	Noise Gate x 1, Compressor x 1, 3 Band EQ x 1	
Harmony/Echo	17 Preset	
Master EQ	5 Preset + 2 User	5 Band
Part EQ	29 parts	2 Band, 29 parts (RIGHT1, RIGHT2, RIGHT3, LEFT, STYLE x 8, SONG x 16, M.PAD)
Master Compressor	5 Preset + 5 User	3 Band. Type, Threshold, and Gain (3 Band) can be set.
Touch Response	5 Preset	
Tempo	5 ~ 500	
Transpose	-12 ~ 0 ~ 12	Can be set independently for Keyboard, Song, and Master.
Tune	414.8 ~ 440 ~ 466.8Hz	Set in 0.2Hz units. A3 is set to 440Hz as default.
Upper Octave	-1, 0, +1	
Part Octave	-2, -1, 0, +1, +2	
Pitch Bend Wheel	(Available)	
Modulation Wheel	(Available)	
Style:		
Preset Styles	300	Assigned to 10 category buttons
User Styles	Maximum number is unlimited; depends solely on the capacity of the USER/FD/HD drives. *	Created data can be saved to the USER/FD/HD drive.
Style selection	Can be switched between PRESET and USER/DISK	When USER/DISK is turned ON, the path can be set to each of 10 category buttons.
Data Format	Style File Format	Up to 120 Kbytes per style
Controls	INTRO x 3	
	FILL IN x 4	
	BREAK x 1	
	MAIN x 4	
	ENDING x 3	Includes ritardando (rit.) function
	FADE IN/OUT	
	TAP TEMPO	
	Fingered Mode	Single Finger, Multi Finger, Fingered, On Bass, Full Keyboard, AI Fingered, AI Full Keyboard

One Touch Setting:	4 setups per style	Programmable
Music Finder:	1446 Records	Programmable up to 2500 Records.
Multi Pad:		
Control	PAD 1/2/3/4, STOP	
Bank	Maximum number is unlimited; depends solely on the capacity of the USER/FD/HD drives. *	Created data can be saved to the USER/FD/HD drive.
Song:		
Playback method	Disk Direct playback	Includes Quick Start function
Selection controls	I/II/III/IV/V/VI of next song (NEXT/CANCEL) function.	Includes Chain playback, Random playback, and the reservation
Playback controls	SP1/SP2/SP3/SP4/LOOP	Up to 4 song positions can be set and used for Jump/Loop playback.
Maximum number of songs	Maximum number is unlimited; depends solely on the capacity of the USER/FD/HD drives. *	Created data can be saved to the USER/FD/HD drive.
Channels	16	
Recording capacity	Approximately 35,000 notes max.	Recording methods: Quick Record, Multi Track Record, Step Record, Chord Step
Registration Memeory:	8 buttons	Includes Freeze function. Created data can be saved to the USER/FD/HD drive.
Language:	6 languages	English, German, French, Spanish, Italian, Japanese
Display:	Backlit Graphic LCD	7.8 inch, 640 x 480 dot
Lyrics	(Available)	XF, TUNE1000
Lyrics (others)	(Available)	KAR, M-Live
Score	(Available)	SMF
File Selection type	Direct Selection/Number Input	Voices, styles, songs, Multi Pad banks, Registration Memory banks can be selected.
Disk:		
Compatible format	XG, XF, GM, GM Level2, SMF, DOC, Piano Player (ESEQ), Style File Format (SFF)	
User drive	3.3 MB	Up to 250 files/folders can be created in one folder.
Floppy disk	3.5 2HD/2DD	Up to 250 files/folders can be created in one folder. Floppy disk capacity (root directory): up to 224 files/folders for 2HD, up to 112 files/folders for 2DD.
Hard disk	2.5-inch HD (optional)	Up to 250 files/folders can be created in one folder.
Demonstrations:	6 languages	English, German, French, Spanish, Italian, Japanese
Help:	6 languages	English, German, French, Spanish, Italian, Japanese
Connectors:		
MIDI	MIDI A (IN/OUT) MIDI B (IN/OUT)	
Controls	FOOT PEDAL 1/2/3	Assignable; default settings are 1: Sustain, 2: DSP Variation, 3: Volume.
USB	USB Slave x 1	USB Ver. 1.1
Video Out	NTSC/PAL Composite Signal	The current LCD contents or the Lyrics of the current song can be displayed on an external video monitor.
Audio (Analog)	PHONES LOOP SEND (L/L+R, R) LINE OUT MAIN (L/L+R, R), SUB (1/2) AUX IN/LOOP RETURN (L/L+R, R), TRIM VOL TO SUB WOOFER L/R TO LEFT/RIGHT SPEAKER	
	MIC/LINE IN	Includes TRIM and INPUT VOLUME controls, and SIGNAL/OVER indicator. A standard dynamic microphone with an impedance of about 250 ohms is recommended.
Power Supply	AC Inlet	Power consumption: 45W
Dimensions:	1140 (L) x 428 (D) x 137 (H) mm	Not including the music rest, speakers and brackets.
Weight: 12.4 kg		
Packing List:		
AC power cord x 1		
Music rest and brackets		
CD-ROM		
Owner's Manual, Data List, Installation Guide		
USB cable		
Optional Accessories:		
Speaker	TRS-MS01	
Foot Switch	FC4/5	
Foot Controller	FC7	
Headphones	HPE-150/HPE-160	
Keyboard Stand	L-7/L-7S	
Bench	BC-6	
Hard Disk	2.5-inch IDE	Height 12.7 mm max., 40 GB max. (current availability; support for up to 137 GB)

SPECIFICATIONS (TRS-MS01)

Type	Advanced Active Servo Technology
Output power	Satellite speakers ..... 20 W + 20 W
	(1 kHz, 4 a t T.H.D.=10%)
	Subwoofer ..... 40 W (100 Hz, 5 a t T.H.D.=10%)
Frequency response	32 Hz to 20 kHz
Speaker unit	Satellite speakers
	Tweeter ..... 1.9 cm (3/4") dome, magnetic shielding
	Midrange ..... 8 cm (3") cone, magnetic shielding
	Subwoofer ..... 16 cm (6.5") cone, magnetic shielding
Power consumption	65W
Power supply	U.S.A. and Canada models ..... AC 120 V, 60 Hz
	Australia model ..... AC 240 V, 50 Hz
	U.K. and Europe models ..... AC 230 V, 50 Hz
Dimensions (W x H x D)	Satellite speakers ..... 97 (3.8") x 174 (6.9") x 178 (7") mm
	Subwoofer ..... 350 (13.8") x 210 (8.3") x 321 (12.6") mm
Weight	Satellite speakers ..... 0.7 kg (1 lb. 9 oz.) x 2
	Subwoofer ..... 8.0 kg (17 lbs. 10 oz.)
Accessories	Speaker brackets x 2, RCA pin cables x 2,
	RCA pin/8-pin combination cable x 1

■ PANEL LAYOUT (Tyros)

● Front Panel

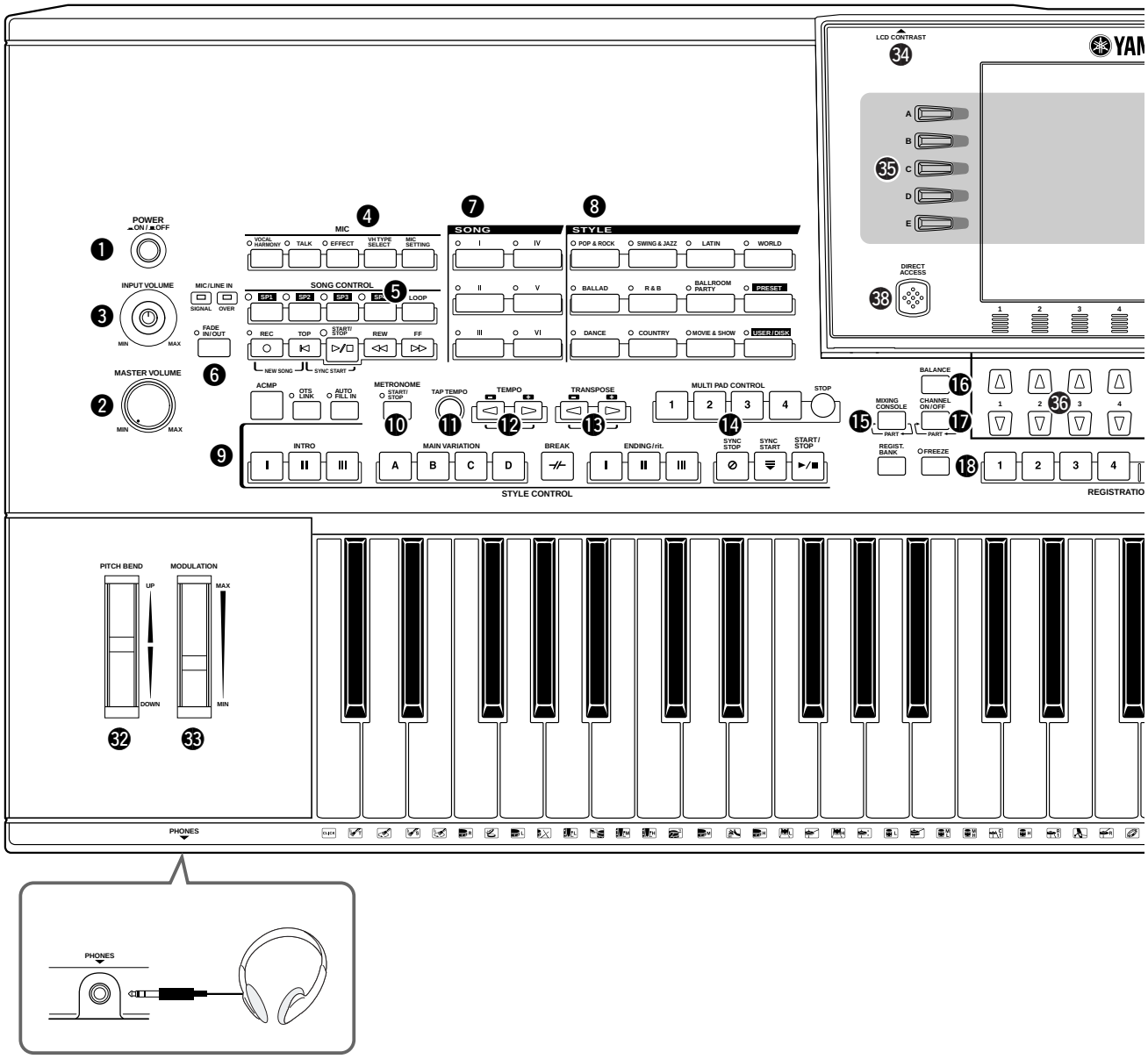

❶ POWER ON/OFF switch
❷ MASTER VOLUME control
❸ INPUT VOLUME control
❹ MIC buttons
❺ SONG CONTROL buttons
❻ FADE IN/OUT buttons
❼ SONG buttons
❽ STYLE buttons
❾ STYLE CONTROL buttons
❿ METRONOME button
⓫ TAP button
⓬ TEMPO button
⓭ TRANSPOSE button
⓮ MULTI PAD buttons
⓯ MIXING CONSOLE button
⓰ BALANCE button
⓱ CHANNEL ON/OFF button
⓲ REGISTRATION MEMORY buttons
⓳ DEMO button
⓴ HELP button

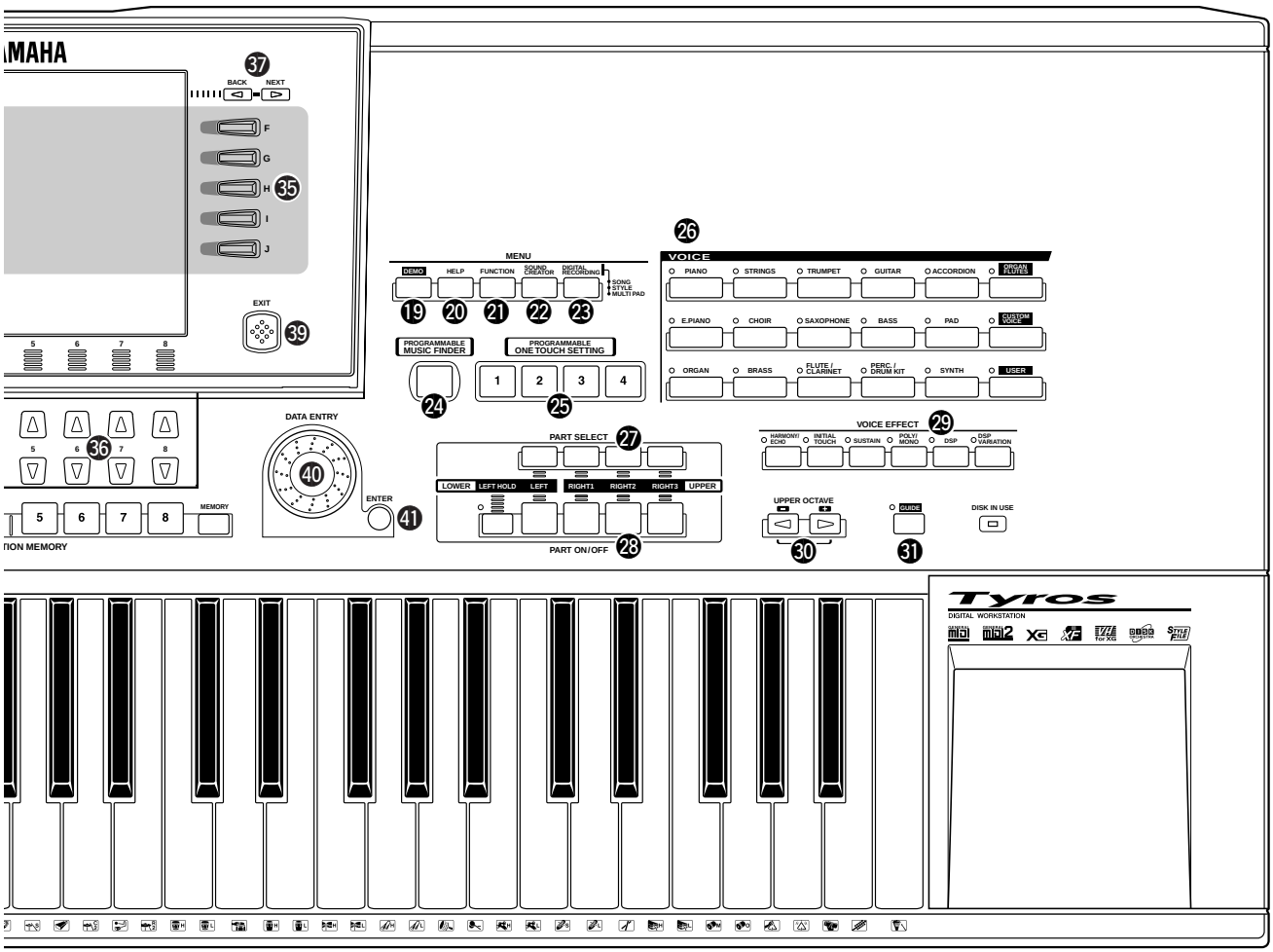

- ㉑ FUNCTION button
- ㉒ SOUND CREATOR button
- ㉓ DIGITAL RECORDING button
- ㉔ PROGRAMMABLE MUSIC FINDER button
- ㉕ PROGRAMMABLE ONE TOUCH SETTING buttons
- ㉖ VOICE buttons
- ㉗ PART SELECT buttons
- ㉘ PART ON/OFF buttons
- ㉙ VOICE EFFECT buttons
- ㉚ UPPER OCTAVE buttons
- ㉛ GUIDE button
- ㉜ PITCH BEND wheel
- ㉝ MODULATION wheel
- ㉞ LCD CONTRAST
- ㉟ LCD A-J Buttons
- ㊱ LCD 1-8 Buttons
- ㊲ BACK / NEXT Buttons
- ㊳ DIRECT ACCESS Button
- ㊴ EXIT Button
- ㊵ DATA ENTRY Dial
- ㊶ ENTER Button

● Rear Panel

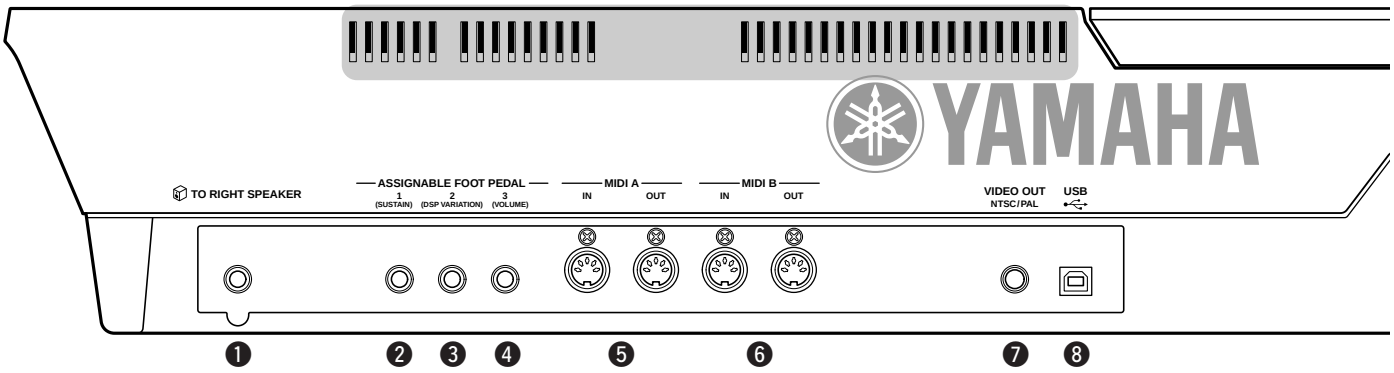

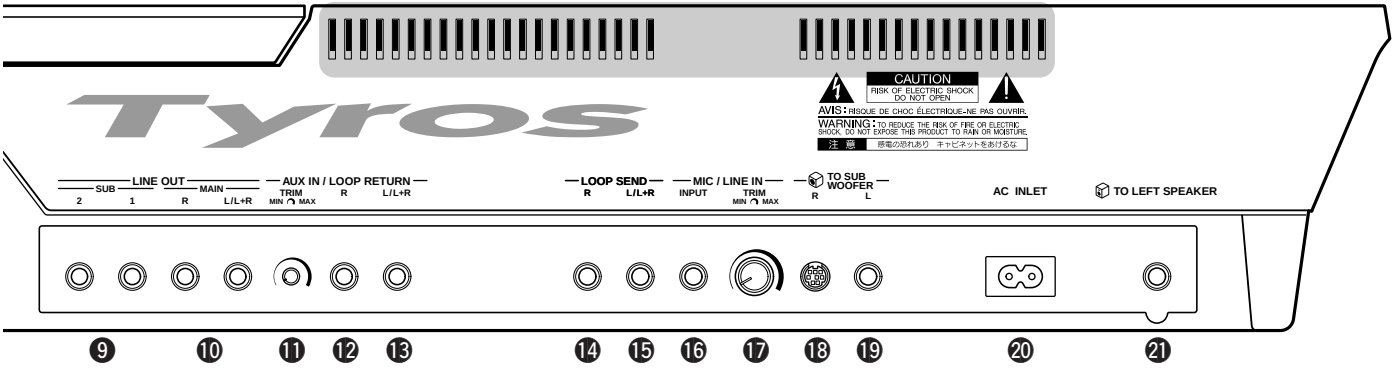

❶ TO RIGHT SPEAKER jack
❷ ASSIGNABLE FOOT PEDAL [SUSTAIN] jack
❸ ASSIGNABLE FOOT PEDAL [DSP VARIATION] jack
❹ ASSIGNABLE FOOT PEDAL [VOLUME] jack
❺ MIDI A [IN], [OUT] jack
❻ MIDI B [IN], [OUT] jack
❼ VIDEO OUT jack
❽ USB jack (to PC)
❾ LINE OUT SUB [1], [2] jack
❿ LINE OUT MAIN [R], [L/L+R] jack
⓫ AUX IN / LOOP RETURN TRIM control
⓬ AUX IN / LOOP RETURN [R] jack
⓭ AUX IN / LOOP RETURN [L/L+R] jack
⓮ LOOP SEND [R] jack
⓯ LOOP SEND [L/L+R] jack
⓰ MIC / LINE IN INPUT jack
⓱ MIC / LINE IN INPUT TRIM control
⓲ TO SUB WOOFER [R] jack
⓳ TO SUB WOOFER [L] jack
⓴ AC INLET
㉑ TO LEFT SPEAKER jack

■ PANEL LAYOUT (TRS-MS01)

● SUB WOOFER

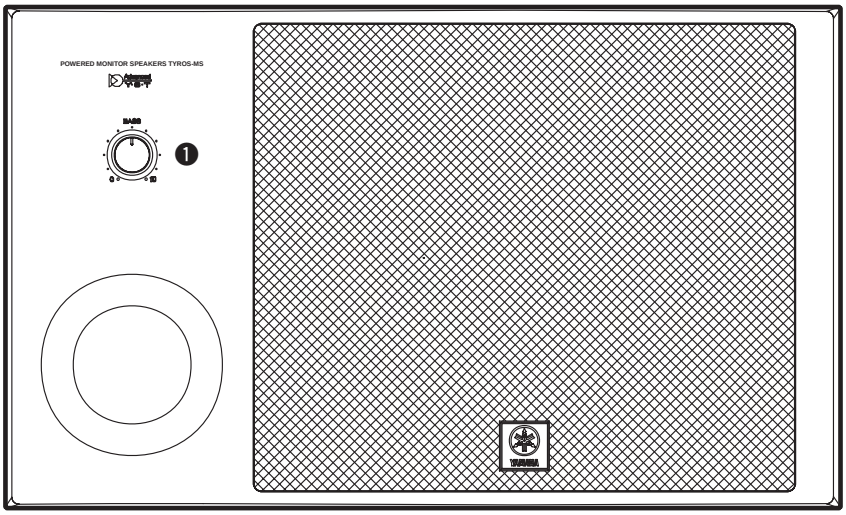

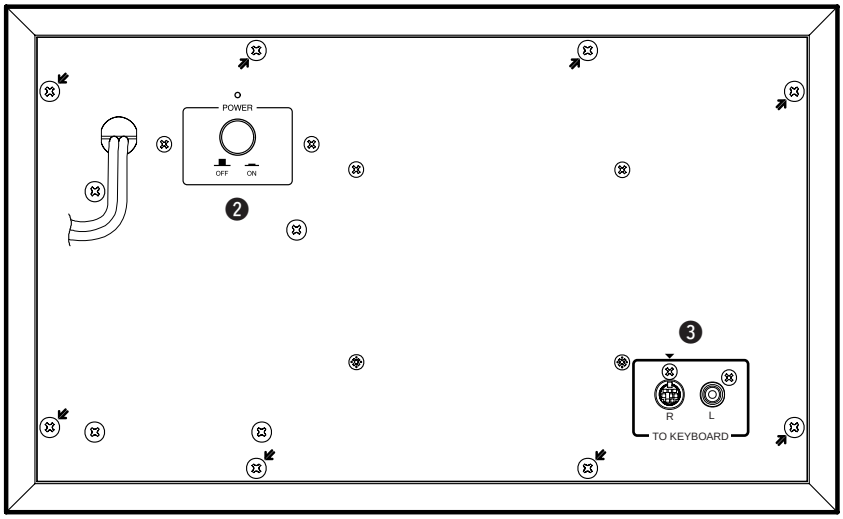

● Satellite Speaker

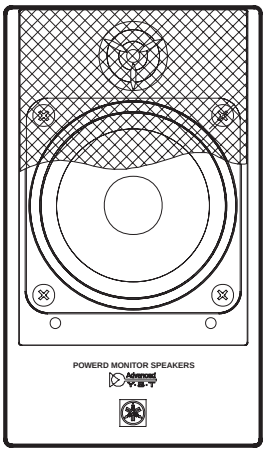

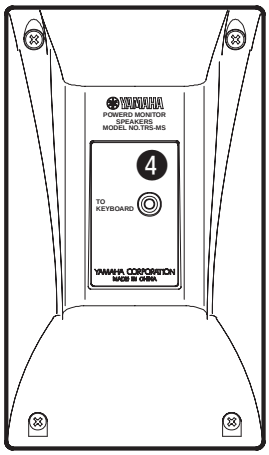

❶ BASS Control knob
❷ POWER ON/OFF Switch
❸ TO KEYBOARD L, R Jack (WOOFER)
❹ TO KEYBOARD Jack (Satellite)

■ CIRCUIT BOARD LAYOUT (Tyros)

● Lower Case Side

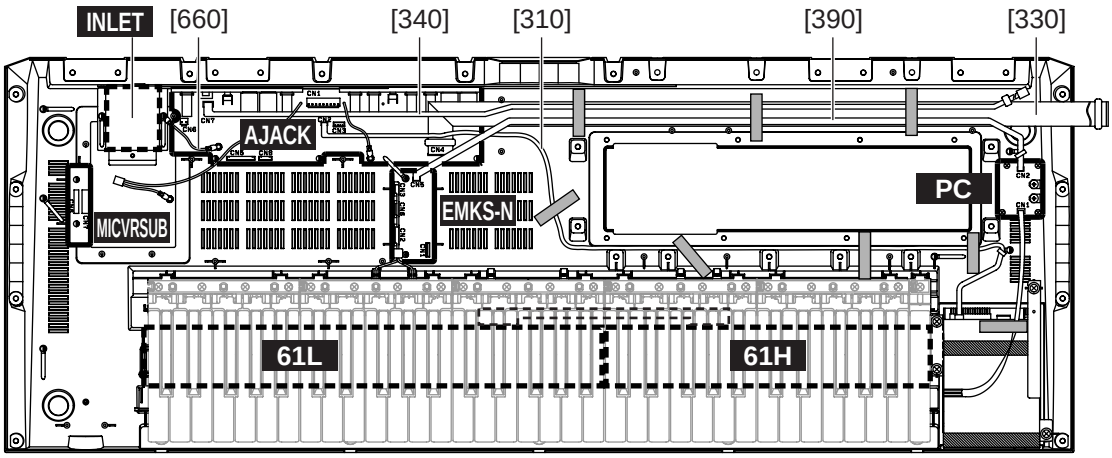

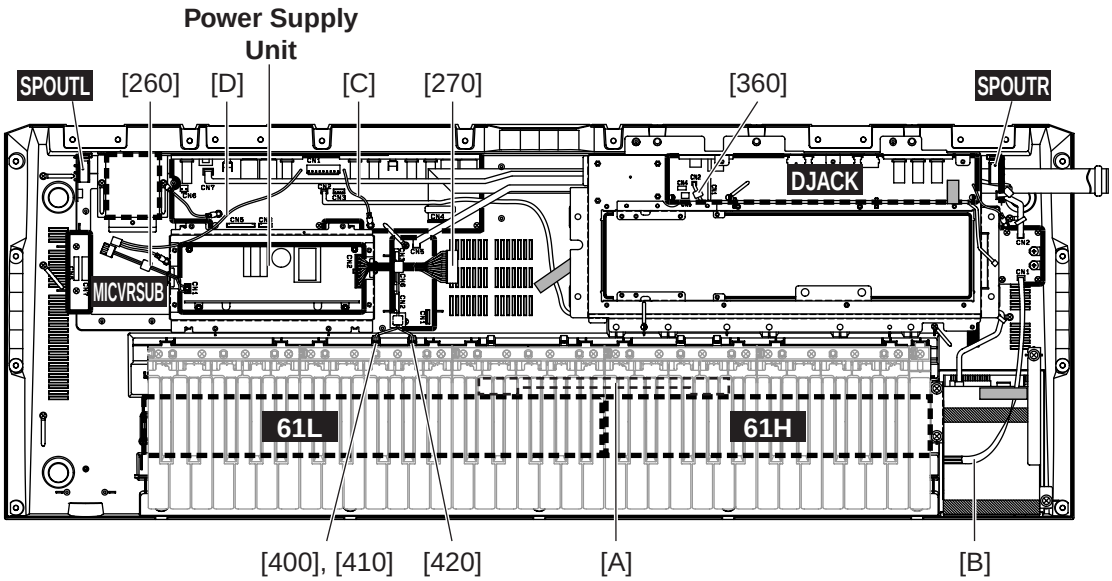

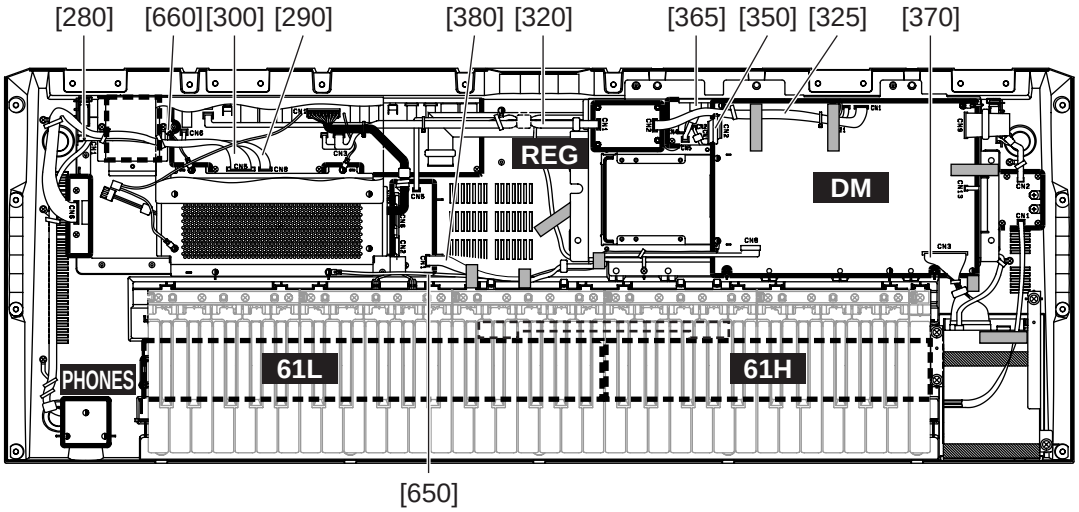

● Lower Case Side

Location	Parts No.	W.H name	Discription Source	Destination	Notes
260	(WA60900)	INLET (2P)	Power supply unit-CN1	INLET-CN3	Gray wire is adjusted to Pin 1 mark (▲mark)
270	(WA60890)	SW (9P)	Power supply unit-CN2	AJACK-CN1	Red wire is adjusted to Pin 1 mark (▲mark)
280	(V919700)	SPL (2P)	AJACK-CN6	SPOUTL-CN1	Red wire is adjusted to Pin 1 mark (▲mark)
290	(WA60810)	HP (6P)	AJACK-CN8	PHONES-CN4	Red wire is adjusted to Pin 1 mark (▲mark)
300	(V926360)	VR2 (14P)	AJACK-CN5	MICVRSUB-CN6	
310	(V919790)	FDD1 (2P)	AJACK-CN2	3.5"FDD Unit (power)	Red wire is adjusted to Pin 1 mark (▲mark)
320	(WA61040)	POW (4P)	AJACK-CN3	REG-CN1	The direction whith dose not have a ferrite core is AJACK-CN3 connected.
325	(V962540)	POW2 (7P)	REG-CN2	DM-CN1	Red wire is adjusted to Pin 1 mark (▲mark)
330	WA120900	FCC4 (24P)	AJACK-CN4	DM-CN9	Insulated plate side is a PCB end side
340	(WA60940)	SPR (3P)	AJACK-CN7	SPOUTR-CN5	Red m wire is adjusted to Pin 1 mark (▲mark) The direction whith dose not have a ferrite core is AJACK-CN7 connected.
350	WA121000	FCC5 (21P)	DM-CN2	DJACK-CN1	Insulated plate side is a PCB end side
360	(WA61010)	VIDEO (2P)	DJACK-CN2	DM-CN13	Conduction line is adjusted to Pin 1 mark (▲mark) The direction with a ferrite core is DJACK-CN2 connected.
365	(WA61080)	USB1(4P)	DM-CN21 & PCB	DJACK-CN4, CN5	
370	WA120200	FDD(34P)	DM-CN3	3.5" FDD Unit	
380	(WA60990)	MKS (7P)	DM-CN8	EMKS-N -CN1	Red wire is adjusted to Pin 1 mark (▲mark) The direction whith dose not have a ferrite core is DM-CN8 connected.
390	V9197600	PC (3P)	PC-CN2	EMKS-N -CN5	Red wire is adjusted to Pin 1 mark (▲mark)
400	(V919630)	MK2 (7P)	61L-CN5	EMKS-N -CN6	edge mark is adjusted to Pin 1 mark (▲mark)
410	(V919640)	MK3 (5P)	61H-CN2	EMKS-N -CN3	edge mark is adjusted to Pin 1 mark (▲mark)
420	(V919650)	MK4 (12P)	61H-CN1	EMKS-N -CN2	edge mark is adjusted to Pin 1 mark (▲mark)
A	V8696200	Relay	61L-CN4	61H-CN3	edge mark is adjusted to Pin 1 mark (▲mark)
B	V9357100	PC sensor (2P)	PC sensor	PC-CN1	Carbon side is a PCB end side
650	(WA12570)	GND3	DM Screw stop	Power supply shield cover	
660	(WA53110)	GND9	INLET BOX Screw stop	Power supply shield cover	
C	(WA12590)	GND5	AJACK-G3	Power supply shield cover	
D	WA126200	GND8	AJACK-G4	PNL-CN7	

Parts in parenthese are not supplied as the replacement parts.

● Upper Case Side

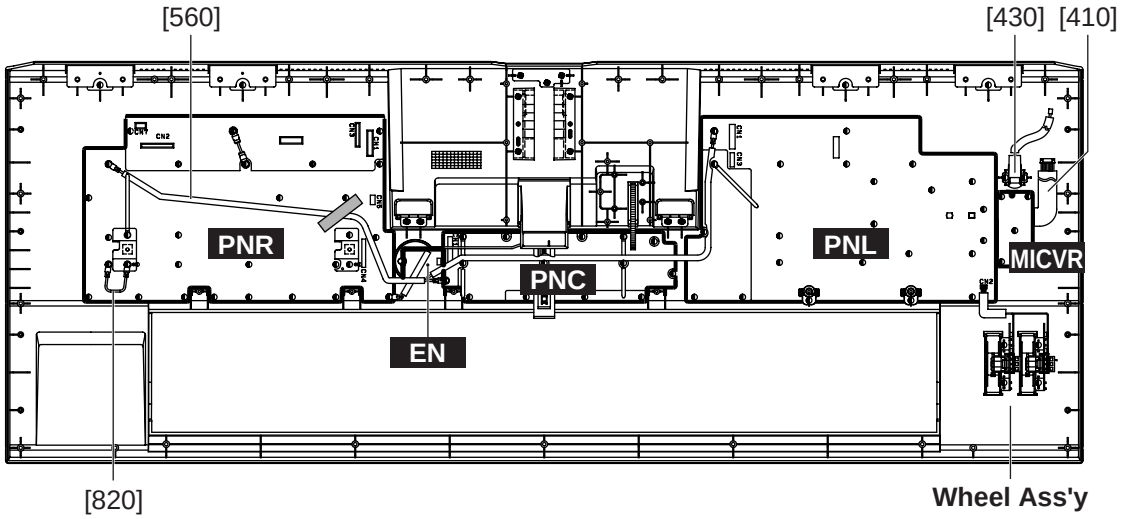

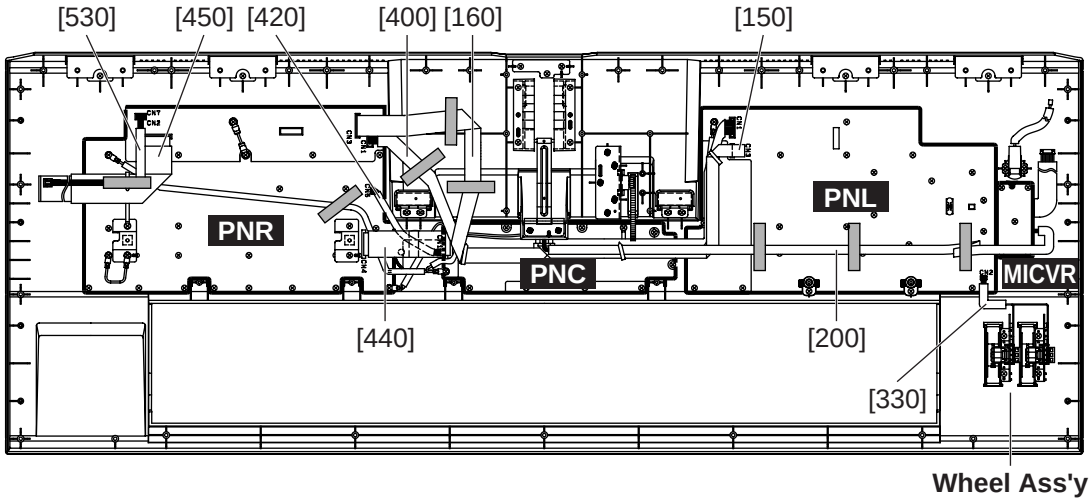

● LCD Unit Assembly

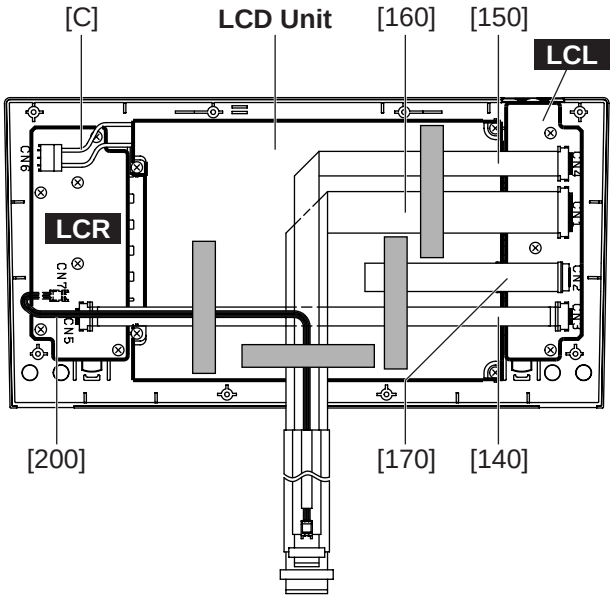

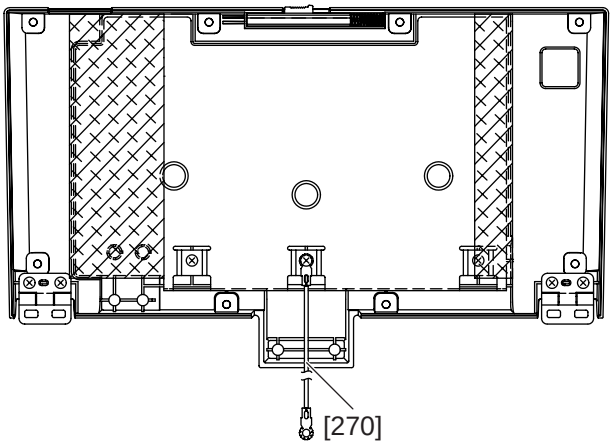

● Upper Case Side

Location	Parts No.	W.H name	Discription Source	Destination	Notes
330	(V928200)	WHEEL (4P)	WHEEL Unit	PNL-CN2	Yellow wire is adjusted to Pin 1 mark (▲mark)
400	(WA60830)	PNLR (12P)	PNL-CN1	PNR-CN1	Red wire is adjusted to Pin 1 mark (▲mark)
410	(WA60840)	VR1(14P)	MICVR-CN4	MICVRSUB-CN7	
420	(WA60820)	EN (4P)	PNR-CN5	EN-CN6	Red wire is adjusted to Pin 1 mark (▲mark)
430	(WA60790)	POWER	Power SW	INLET-CN2	
440	WA120800	FFC3 (30P)	PNR-CN4	PNC-CN1	Insulated plate side is a PCB end side
450	WA120700	FFC2 (30P)	PNR-CN2	DM-CN14	Insulated plate side is a PCB end side A antivibration foams side is PNR-CN2 connected.
530	(WA61060)	LED (4P)	PNR-CN7	DM-CN20	A ferrite core side is PNR-CN7 connected.
560	(WA60860)	GND	PNC Screw stop	PNR Scwer stop	
820	(WA12580)	GND4	PNR Screw stop	Shield cover support	

● LCD Unit Assembly

Location	Parts No.	W.H name	Discription Source	Destination	Notes
140	MFA09250	CARD	LCL-CN3	LCR-CN5	
150	WA121100	FFC6 (12P)	LCL-CN4	PNL-CN3	Insulated plate side is a PCB end side The direction whith dose not have a ferrite core is LCL-CN4 connected.
160	WA120600	FFC1 (21P)	LCL-CN1	PNR-CN3	Insulated plate side is a PCB end side The direction whith dose not have a ferrite core is LCL-CN1 connected.
170	V9198800	CARD (20P)	Display Unit	LCL-CN2	Insulated plate side view
200	(WA60850)	INV (2P)	LCR-CN7	MICVR-CN5	Red wire is adjusted to Pin 1 mark (▲mark) The direction whith dose not have a antivibration foams is LCR-CN7 connected.
270	(WA60860)	GND2	LCD Support stay	PNR Screw stop	
C	--	-- (2P)	LCD Unit	LCR-CN6	Red wire is adjusted to Pin 1 mark (▲mark)

Parts in parenthese are not supplied as the replacement parts.

■ CIRCUIT BOARD LAYOUT (TRS-MS01)

● SUB WOOFER Unit

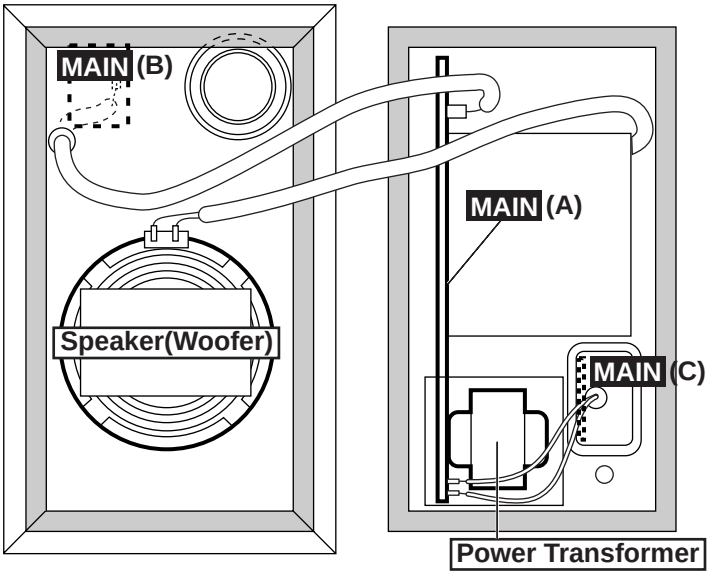

● Satellite Speaker

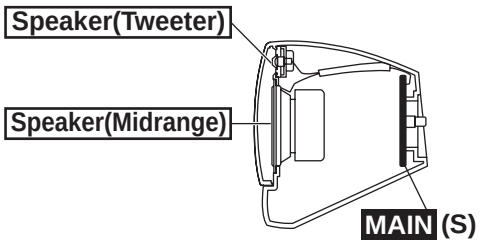

■ DISASSEMBLY PROCEDURE (Tyros)

● **Electrical Check After Disassembly**

The power will not turn on after the unit is seperated into the upper case assembly and the lower case assembly. Then you can perform electrical check by using two connector assemblies supplied as service parts. The connection procedure is as follows.

A. Power Switch

A-1 Remove the power switch from the upper case assembly. (See procedure 25)

A-2 Connect the POWER connector assembly into the CN2 on the INLET circuit board.

B. MICVRSUB Circuit Board

B-1 Remove the MICVRSUB circuit board. (See procedure 12)

B-2 Connect the VR1 connector assembly into the CN7 on the MICVRSUB circuit board.

C. Connector Assembly (service parts)

C-1 Remove the shield upper cover. (See procedure 20)

C-2 Connect the CN2 on the PNR circuit board and the CN14 on the DM circuit board via the FFC2 service connector assembly.

C-3 Connect the CN7 on the PNR circuit board and the CN20 on the DM circuit board via the LED service connector assembly.

● FFC2 Service Connector Assembly (MFA30600)
● LED Service Connector Assembly (WA858300)

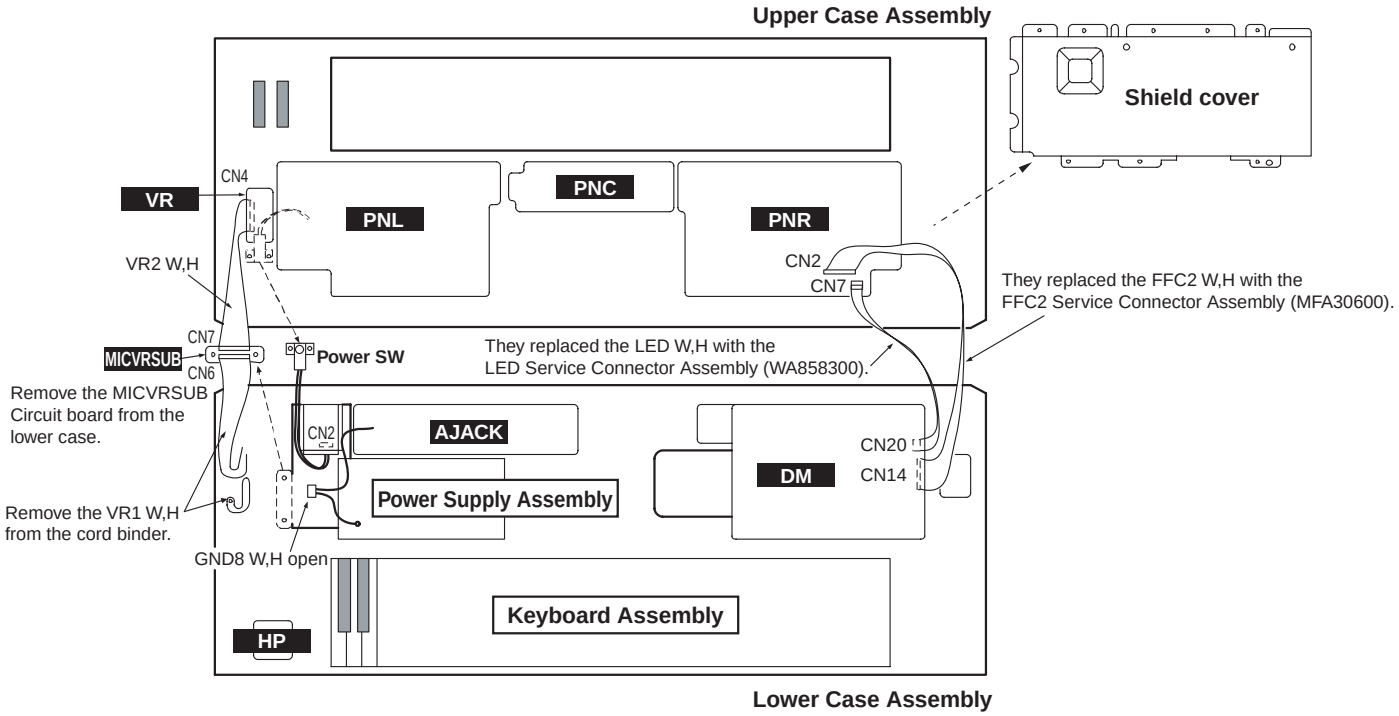

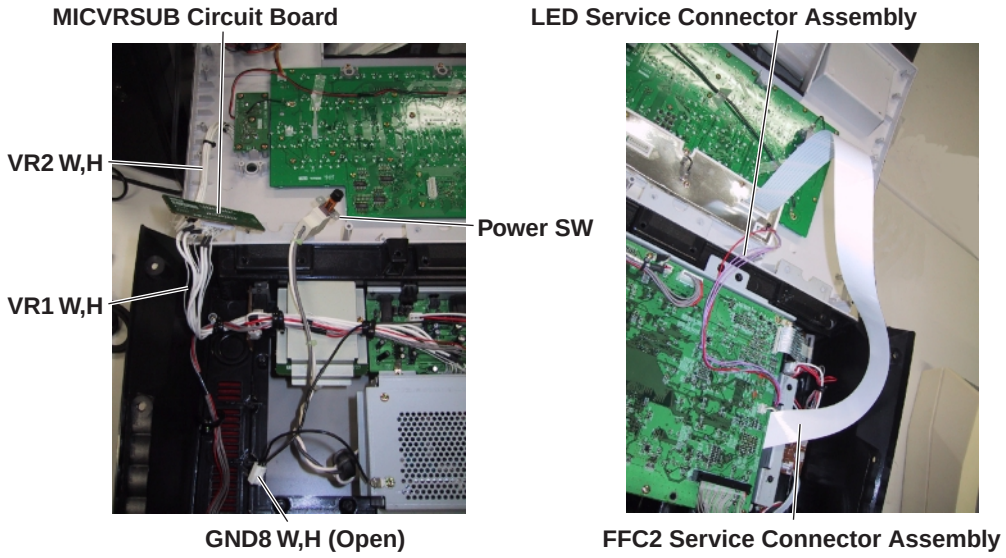

* If you remove the filament tapes for disassembling, make sure to apply them on the same condition as before they are removed.

1. Separating the Unit into the Upper Case Assembly and the Lower Case Assembly (Time required: about 9 min)

1-1 Remove the eight (8) screws marked [100a] to remove the under cover L. (Fig.1)

1-2 Remove the screw marked [100b] and the four (4) screws marked [130] to remove the under cover S. (Fig.1)

1-3 Remove the two (2) screws marked [130a] to remove the inlet lower box. (Fig.2)

1-4 Disconnect the POWER W.H [a] on the INLET circuit board from the CN2, the VR1 W.H [b] on the MICVRSUB circuit board from the CN7 and the GND8 W.H [c] on the PNL circuit board from the CN7. (Fig.4)

1-5 Disconnect the FFC2 W.H[d] and the LED W.H [e] on the DM circuit board from the CN14 and the CN20 respectively. (Fig.3)

1-6 Remove the twenty-eight (28) screws marked [120] and the nine (9) screws marked [130b]. (Fig.2)

1-7 Remove the six (6) screws marked [140]. (Fig.1)

1-8 Lay the unit right side up, lift the rear of the upper case assembly and pull it diagonally downward to remove. (Fig.5)

* When reinstalling the unit, tighten the four (4) screws marked [A] before others. (Fig.2)

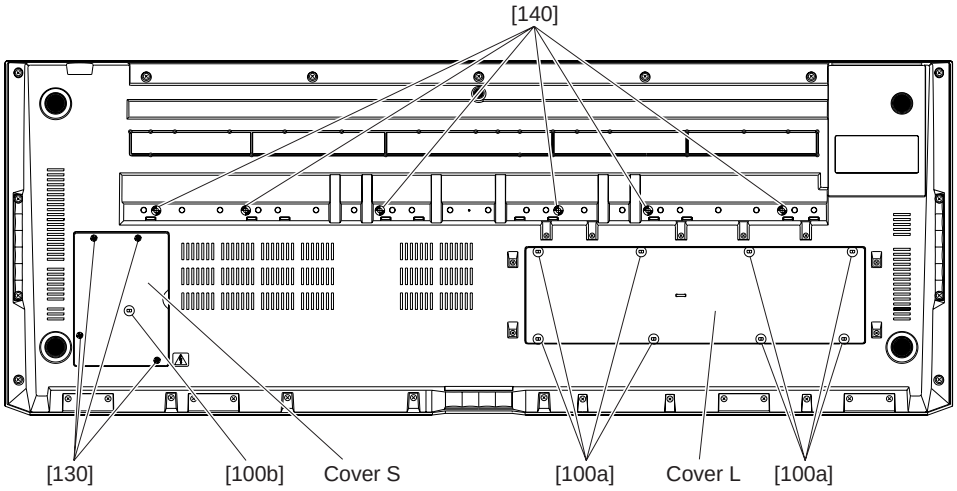

[100]: Bonding Screw 3.0X8 MFZN2BL (VP157800)
[130]: Bind Head Tapping Screw-B 3.0X12 MFZN2Y (VE683000)
[140]: Bind Head Tapping Screw-B 3.0X30 MFZN2Y (V7213700)

(Fig.1)

2. DM Circuit Board (Time required: about 10 min)

2-1 Separate the unit into the upper case assembly and the lower case assembly. (See procedure 1)

2-2 If an optional hard disk unit is installed, remove the four (4) screws marked [60] to remove the hard disk unit with the mounting angle. (Fig.6)

2-3 Remove the seven (7) screws marked [530a]. The DM circuit board can then be removed. (Fig.7)

3. DJACK Circuit Board (Time required: about 12 min)

3-1 Separate the unit into the upper case assembly and the lower case assembly. (See procedure 1)

3-2 Remove the DM circuit board. (See procedure 2)

3-3 Remove the three (3) screws marked [530a] and the eight (8) screws marked [540a]. The DJACK circuit board can then be removed. (Fig.8)

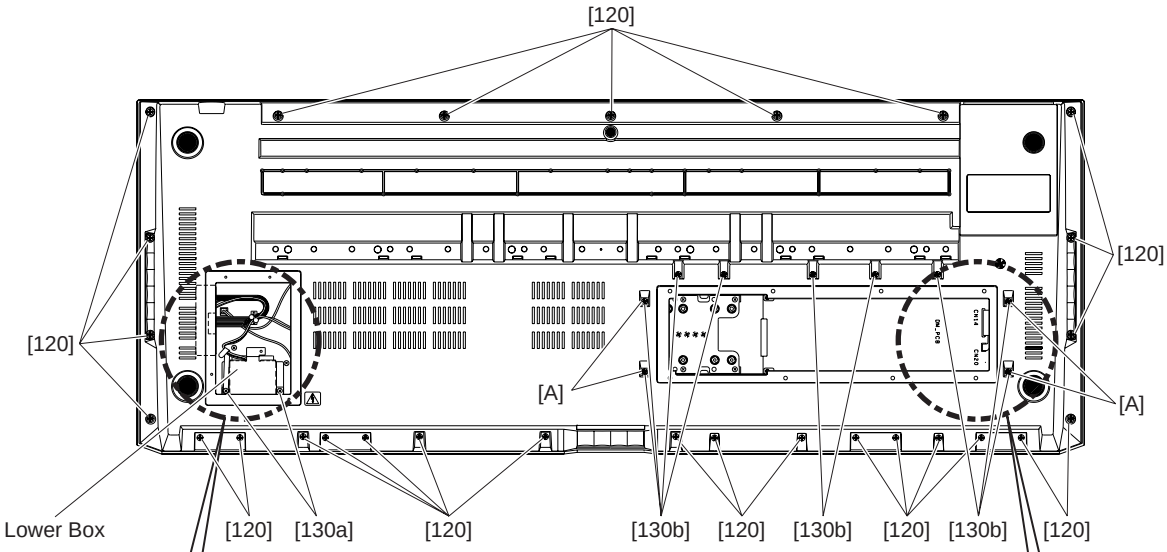

(Fig.2)

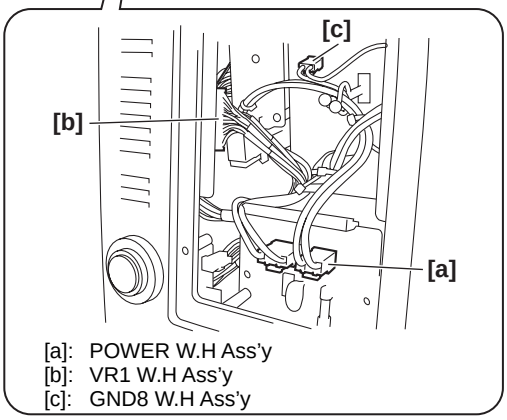

(Fig.4)

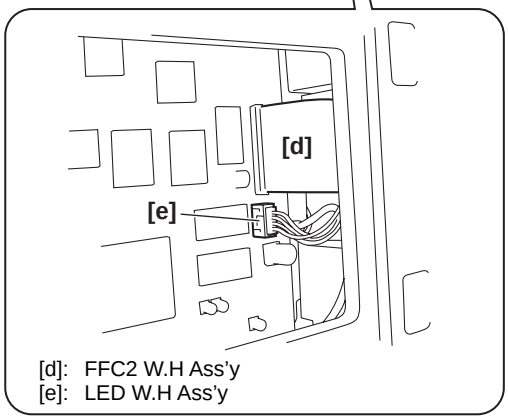

(Fig.3)

[120]: Bind Head Tapping Screw-B 4.0X12 MFZN2BL (VR138400)
[130]: Bind Head Tapping Screw-B 3.0X12 MFZN2Y (VE683000)

(Fig.5)

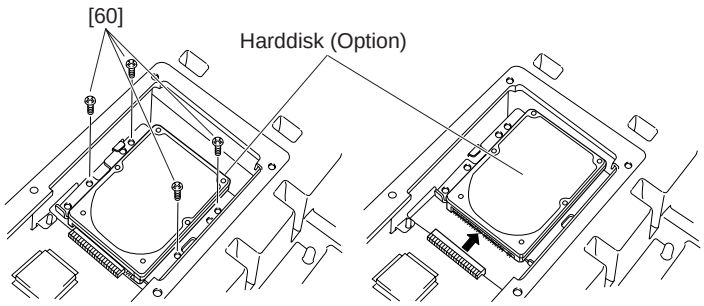

(Fig.6)

4. The PC Circuit Board
(Time required: about 10 min)

4-1 Separate the unit into the upper case assembly and the lower case assembly. (See procedure 1)

4-2 Remove the four (4) screws marked [180]. The PC circuit board can then be removed. (Fig.7)

5 REG Circuit Board
(Time required: about 10 min)

5-1 Separate the unit into the upper case assembly and the lower case assembly. (See procedure 1)

5-2 Remove the four (4) screws marked [580]. The REG circuit board can then be removed. (Fig.7)

6. Power Supply Unit (Time required: about 11 min)

6-1 Separate the unit into the upper case assembly and the lower case assembly. (See procedure 1)

6-2 Remove the two (2) screws marked [530b] to remove the shield sheet L. (Fig.7)

6-3 Remove the six (6) screws marked [530c] to remove the AC upper frame. (Fig.7)

6-4 Remove the four (4) screws marked [580]. The power supply unit can then be removed. (Fig.8)

* When reinstalling the AC upper frame, bundle the shield sheet L with it by the two (2) screws marked [530b]. (Fig.7)

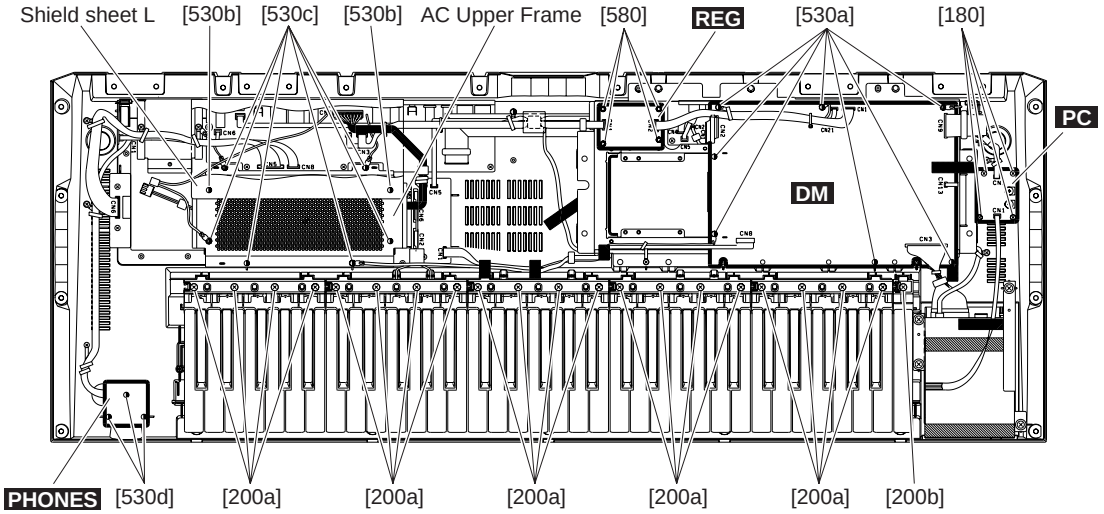

[180]: Bind Head Tapping Screw-B 3.0X8 MFZN2Y (EP600250)
[200]: Bind Head Tapping Screw-P 3.0X20 MFZN2 (VT069800)
[530]: Bind Head Tapping Screw-B 3.0X8 MFZN2Y (EP600250)
[580]: Bind Head Screw 3.0X6 MFZN2Y (EG330040)

(Fig.7)

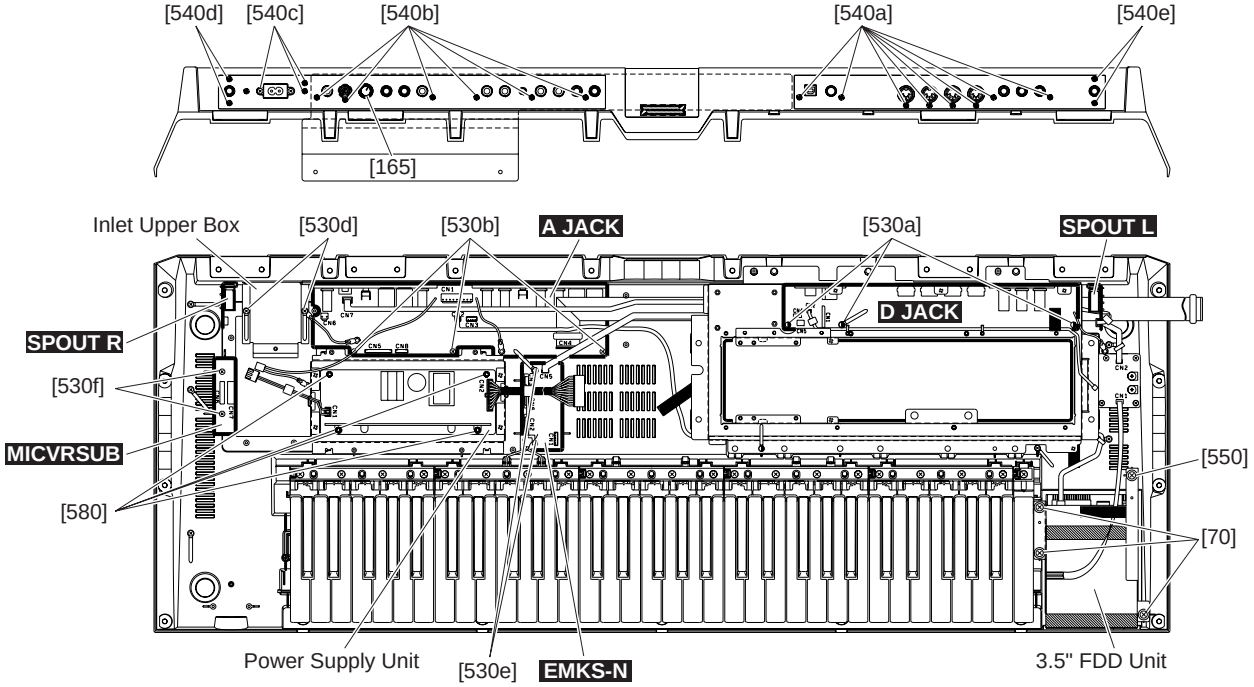

[70]: Bind Head Tapping Screw-B A4.0X16 MFZN2BL (VR145600)
[530]: Bind Head Tapping Screw-B 3.0X8 MFZN2Y (EP600250)
[540]: Bind Head Tapping Screw-B 3.0X10 MFZN2BL (EP600140)
[550]: Sems Pan Head Screw 3.0X10 (V5115200)
[580]: Bind Head Screw 3.0X6 MFZN2Y (EG330040)

(Fig.8)

7. AJACK Circuit Board
(Time required: about 11 min)

7-1 Separate the unit into the upper case assembly and the lower case assembly. (See procedure 1)
7-2 Remove the AC upper frame. (See procedure 6-3)
7-3 Remove the MIC TRIM knob marked [165]. (Fig.8)
7-4 Remove the three (3) screws marked [530b] and the six (6) screws marked [540b]. The AJACK circuit board can then be removed. (Fig.8)
* When reinstalling the AC upper frame, bundle the shield sheet L with it by the two (2) screws marked [530b]. (Fig.7)

8. INLET Circuit Board
(Time required: about 10 min)

8-1 Separate the unit into the upper case assembly and the lower case assembly. (See procedure 1)
8-2 Remove the two (2) screws marked [530d] and the three (3) screws marked [540c] to remove the inlet upper box. (Fig.8)
8-3 Remove the screw marked [530] and the two (2) screws marked [540]. The INLET circuit board can then be removed. (Fig.9)

9. EMKS-N Circuit Board
(Time required: about 10 min)

9-1 Separate the unit into the upper case assembly and the lower case assembly. (See procedure 1)
9-2 Remove the two (2) screws marked [530e]. The EMKS-N circuit board can then be removed. (Fig.8)

10. SPOUTL Circuit Board
(Time required: about 10 min)

10-1 Separate the unit into the upper case assembly and the lower case assembly. (See procedure 1)
10-2 Remove the two (2) screws marked [540d]. The SPOUTL circuit board can then be removed. (Fig.8)

11. SPOUTR Circuit Board
(Time required: about 10 min)

11-1 Separate the unit into the upper case assembly and the lower case assembly. (See procedure 1)
11-2 Remove the two (2) screws marked [540e]. The SPOUTR circuit board can then be removed. (Fig.8)

12. MICVRSUB Circuit Board
(Time required: about 10 min)

12-1 Separate the unit into the upper case assembly and the lower case assembly. (See procedure 1)
12-2 Remove the two (2) screws marked [530f]. The MICVRSUB circuit board can then be removed. (Fig.8)

13. PHONES Circuit Board
(Time required: about 10 min)

13-1 Separate the unit into the upper case assembly and the lower case assembly. (See procedure 1)
13-2 Remove the three (3) screws marked [530d]. The PHONES circuit board can then be removed. (Fig.7)

14. Floppy Disk Drive
(Time required: about 11 min)

14-1 Separate the unit into the upper case assembly and the lower case assembly. (See procedure 1)
14-2 Remove the three (3) screws marked [70] and the screw marked [550]. (Fig.8)
14-3 Remove the two (2) screws marked [580a] to remove the angle L. (Fig.10)
14-4 Remove the two (2) screws marked [580b] to remove the angle R. (Fig.10)

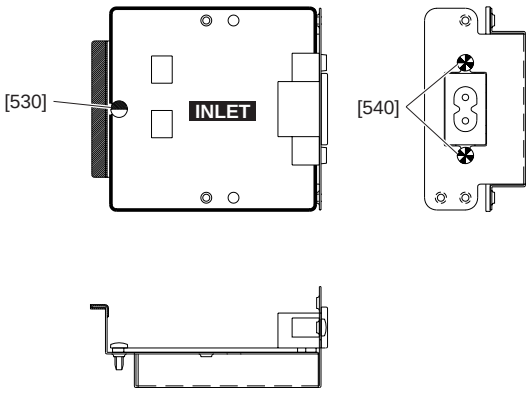

(Fig.9)

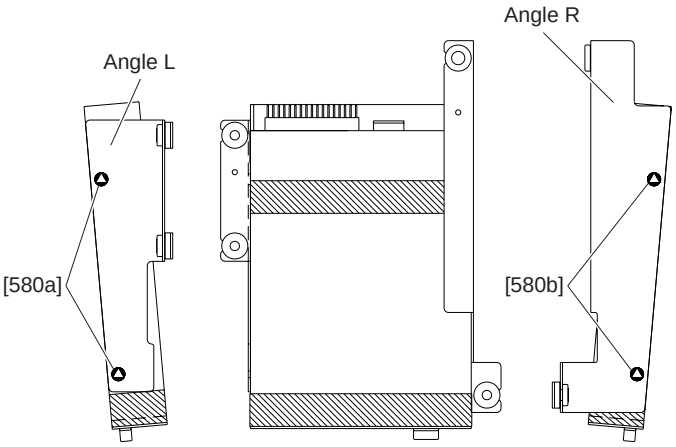

(Fig.10)

[530]: Bind Head Tapping Screw-B 3.0X8 MFZN2Y (EP600250)
[540]: Bind Head Tapping Screw-B 3.0X10 MFZN2BL (EP600140)
[580]: Bind Head Screw 3.0X6 MFZN2Y (EG330040)

15. Keyboard Assembly

* Each octave can be removed individually.

15-1 Separate the unit into the upper case assembly and the lower case assembly. (See procedure 1)

15-2 Remove the four (4) screws marked [200a] for each octave. (Fig.7)
However, remove the screw marked [200b] for the rightmost (C6) key. (Fig.7)

15-3 Push the hook on the keyboard to unlock and lift the rear of it. (Fig.11)

15-4 Move the keyboard diagonally downward to remove. (Fig.11)

16. 61L Circuit Board (Time required: about 13 min)

16-1 Separate the unit into the upper case assembly and the lower case assembly. (See procedure 1)

16-2 Remove the keyboard (C1 to B1, C2 to B2, C3 to B3). (See procedure 15)

16-3 Remove the four (4) screws marked [180a] and the eight (8) screws marked [190a]. The 61L circuit board can then ber removed. (Fig.12-1)

* When reinstalling the 61L circuit board, tighten the screws in order shown in Fig.12-2.

17. 61H Circuit Board (Time required: about 13 min)

17-1 Separate the unit into the upper case assembly and the lower case assembly. (See procedure 1)

17-2 Remove the keyboard (C4 to B4, C5 to B5, C6). (See procedure 15)

17-3 Remove the three (3) screws marked [180b] and the five (5) screws marked [190b]. The 61H circuit board can then be removed. (Fig.12-1)

* When reinstalling the 61H circuit board, tighten the screws in order shown in Fig.12-2.

18 Rubber Contact

18-1 Separate the unit into the upper case assembly and the lower case assembly. (See procedure 1)

18-2 Remove the keyboard assembly corresponding to the rubber contact to remove. (See procedure 15)

18-3 Remove the rubber contact.

(Fig.11)

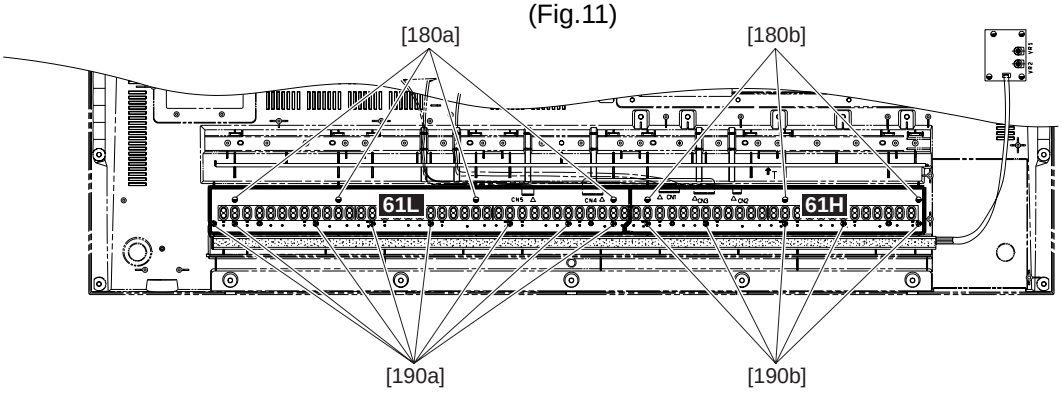

[180]: Bind Head Tapping Screw-B 3.0X8 MFZN2Y (EP600250)
[190]: Bind Head Tapping Screw-P SP 3.0X12 MFZNBL (VZ313100)

(Fig.12-1)

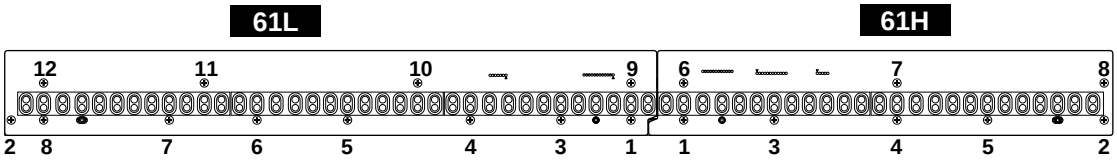

(Fig.12-2)

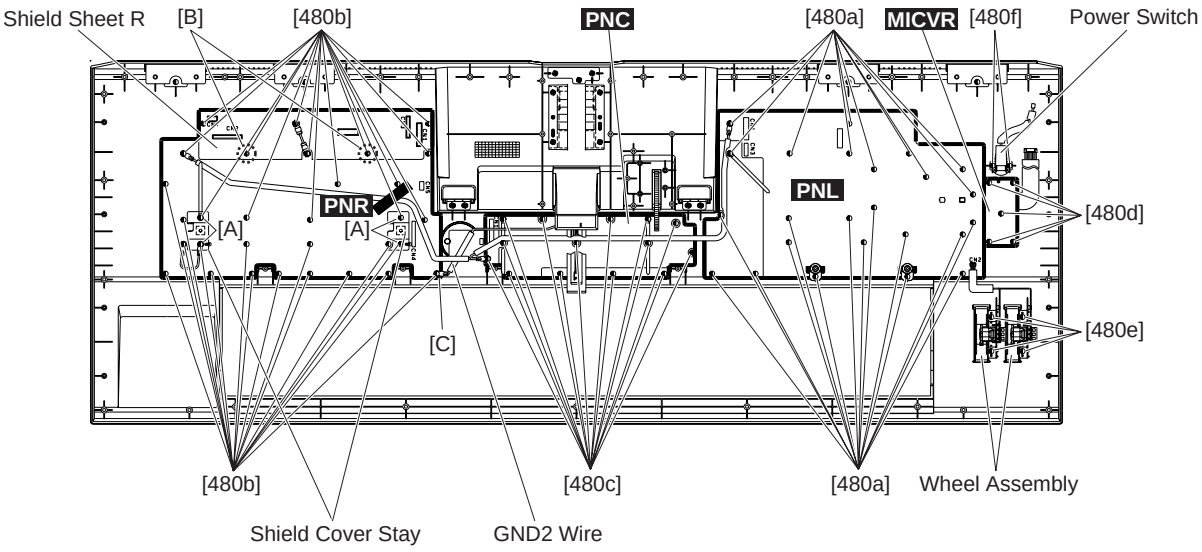

[480]: Bind Head Tapping Screw-B 3.0X8 MFZN2Y (EP600250)

(Fig.13)

19. PNL Circuit Board
(Time required: about 12 min)

19-1 Separate the unit into the upper case assembly and the lower case assembly. (See procedure 1)

19-2 Remove the twenty-four (24) screws marked [480a]. The PNL circuit board can then be removed. (Fig.13)

20. PNR Circuit Board
(Time required: about 14 min)

20-1 Separate the unit into the upper case assembly and the lower case assembly. (See procedure 1)

20-2 Remove the three (3) screws marked [570] to remove the shield upper cover. (Fig.14)

20-3 Remove the thirty-one (31) screws marked [480b]. The PNR circuit board can then be removed. (Fig.13)

* When reinstalling the PNR circuit board, bundle the shield cover stays with it by the four (4) screws marked [A]. (Fig.13)
Besides, bundle the shield sheet R with it by two (2) screws marked [B]. (Fig.13)

21. PNC Circuit Board
(Time required: about 12 min)

21-1 Separate the unit into the upper case assembly and the lower case assembly. (See procedure 1)

21-2 Remove the shield upper cover. (See procedure 20-2)

21-3 Remove the fourteen (14) screws marked [480c]. The PNC circuit board can then be removed. (Fig.13)

*** Note for the panel button replacement**

The replacement part of the panel buttons marked [220] is sixfold.
When replacing these buttons, separate an unnecessary piece from the replacement part. (Fig.15)

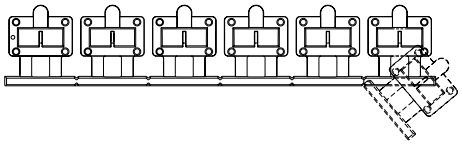

(Fig.15)

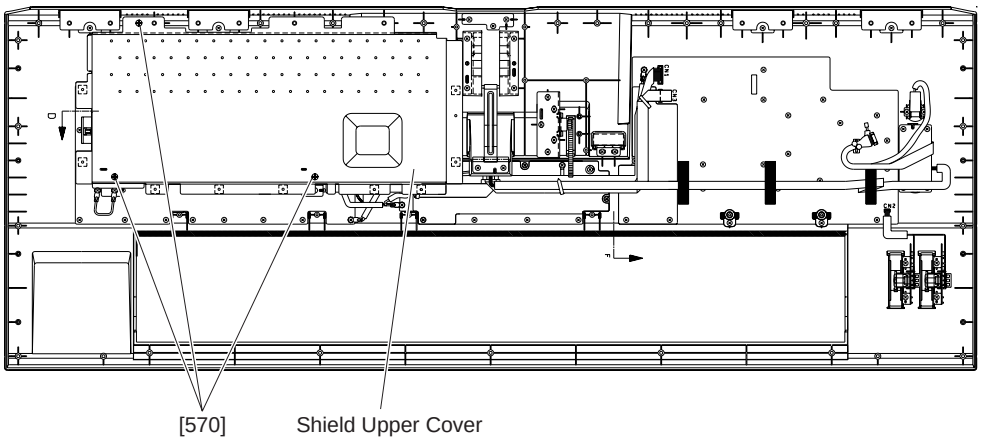

[570]: Bind Head Tapping Screw-B 4.0X12 MFZN2BL (VR138400)

(Fig.14)

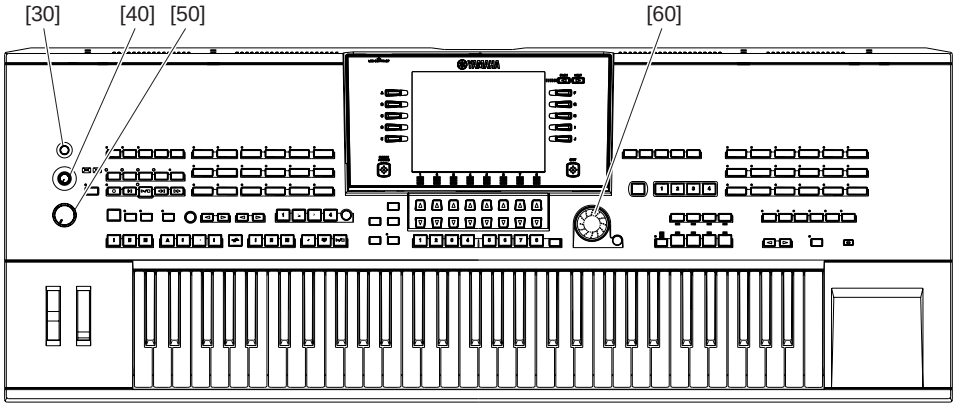

[30]: Bind Head Tapping Screw-B 4.0X12 MFZN2BL (VR138400)
[40]: Bind Head Tapping Screw-B 4.0X12 MFZN2BL (VR138400)
[50]: Bind Head Tapping Screw-B 4.0X12 MFZN2BL (VR138400)
[60]: Bind Head Tapping Screw-B 4.0X12 MFZN2BL (VR138400)

(Fig.16)

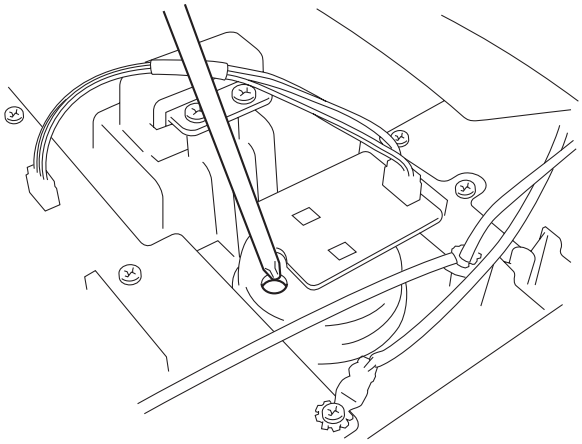

(Fig.17)

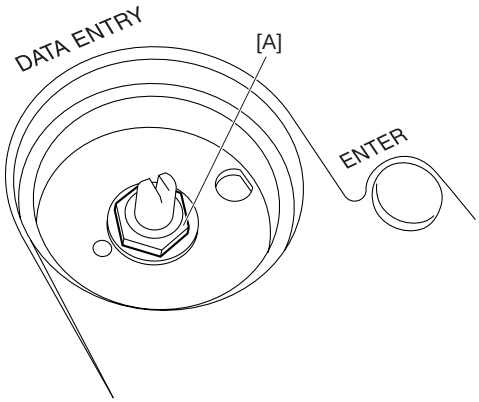

(Fig.18)

22. MICVR Circuit Board (Time required: about 10 min)

22-1 Separate the unit into the upper case assembly and the lower case assembly. (See procedure 1)
22-2 Remove the five (5) screws marked [480d]. (Fig.13)
22-3 Remove the knob marked [40] and the knob marked [50]. The MICVR circuit board can then be removed. (Fig.16)

23. The EN Circuit Board (Time required: about 11 min)

23-1 Separate the unit into the upper case assembly and the lower case assembly. (See procedure 1)
23-2 Remove the shield upper cover. (See procedure 20-2)
23-3 Insert a screw driver (which is not sharp-edged) into the hole beside the EN circuit board, and push out the encoder knob marked [60]. (Fig.16, Fig.17)
* It may damage the encoder knob to push continuously the same point on it. So push out the encoder knob bit by bit rotating it.
23-4 Remove the hexagonal nut marked [A]. The EN circuit board can then be removed. (Fig.18)

24. Wheel Assembly (Time required: about 10 min)

24-1 Separate the unit into the upper case assembly and the lower case assembly. (See procedure 1)
24-2 Remove the four (4) screws marked [480e]. The wheel assembly can then be removed. (Fig.13)

25. Power Switch (Time required: about 10 min)

25-1 Separate the unit into the upper case assembly and the lower case assembly. (See procedure 1)
25-2 Remove the two (2) screws marked [480f]. The power switch can then be removed. (Fig.13)

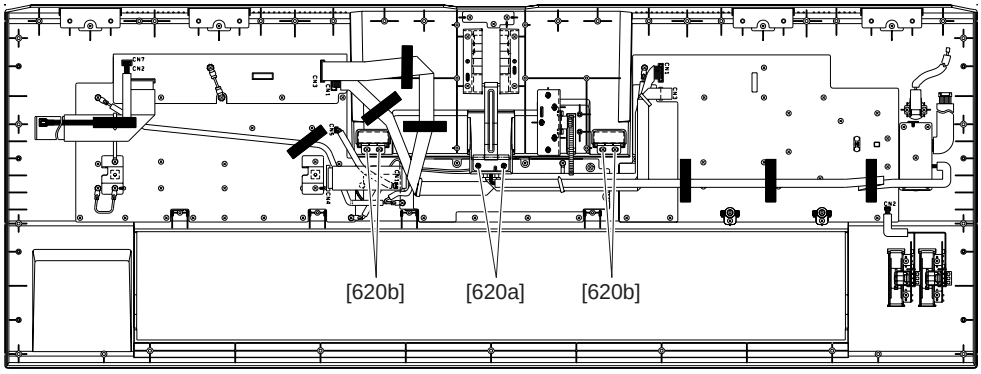

[620]: Bind Head Tapping Screw-B 3.0X12 MFZN2BL (VQ074600)

(Fig.19)

26 LCD Panel Assembly (Time required: about 14 min)

26-1 Separate the unit into the upper case assembly and the lower case assembly. (See procedure 1)

26-2 Remove the shield upper cover. (See procedure 20-2)

26-3 Remove the two (2) screws marked [620a] to unfix the stay bar from notch. (Fig.19)

26-4 Remove the four (4) screws marked [620b]. (Fig.19)

26-5 Remove the screw marked [C] to remove the GND2 wire on the PNR circuit board. (Fig.13)

26-6 Lay the upper case assembly right side up, unlock the hook of LCD panel assembly and raise the LCD unit upright. (Fig.20)

26-7 Remove the two (2) dust proof cloths. (Fig.22)

26-8 Pull out the LCD panel assembly to remove. (Fig.21)

* After removing the LCD panel asssembly, take care not to lose the dust proof cloth. (Fig.22)

* After reinstalling the LCD panel assembly, follow the procedure below and confirm that its angle can be adjusted.
(1) Lay the upper case assembly right side up.
(2) Unlock the hook, raise the panel forward, and confirm that the panel can be steadied at four notches. (Fig.23)
(3) After raising the panel completely, confirm that it can be laid down smoothly. (Fig.24)

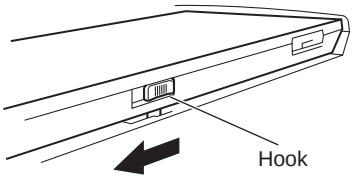

(Fig.20)

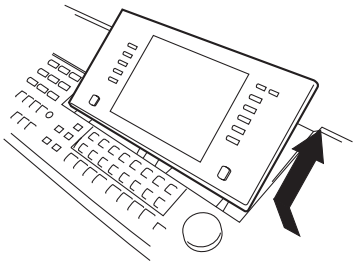

(Fig.21)

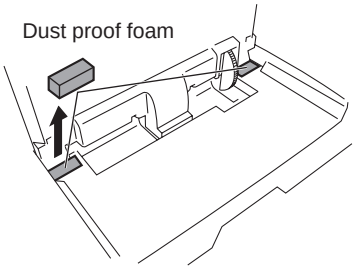

(Fig.22)

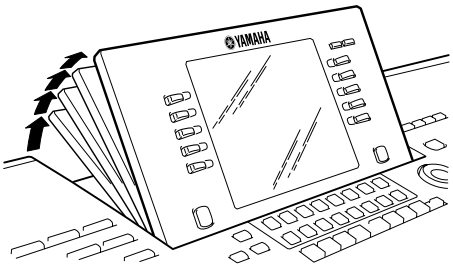

(Fig.23)

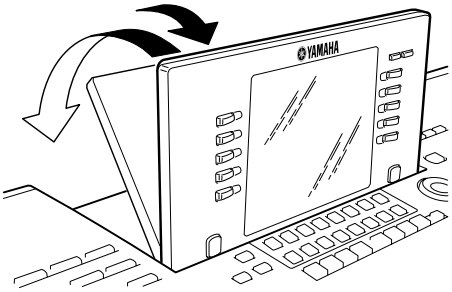

(Fig.24)

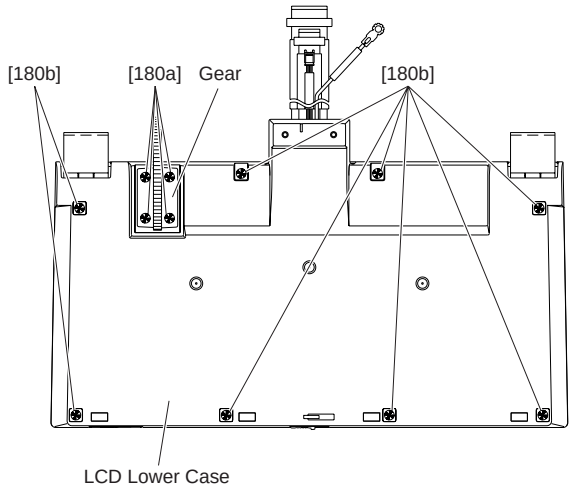

[180]: Bind Head Tapping Screw-B 3.0X12 MFZN2BL (VQ074600)

(Fig.25)

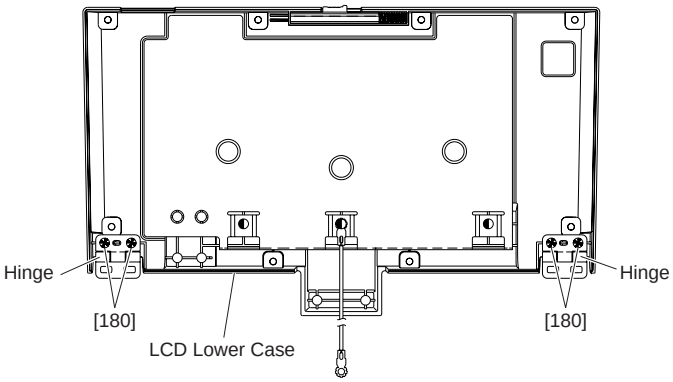

[180]: Bind Head Tapping Screw-B 3.0X12 MFZN2BL (VQ074600)

(Fig.26)

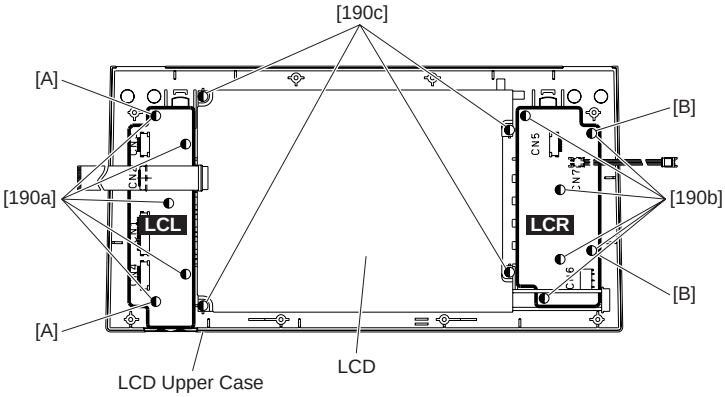

[190]: Bind Head Tapping Screw-B 3.0X8 MFZN2Y (EP600250)

(Fig.27)

27. Disassembly of the LCD Panel Assembly

27a. Gear (Time required: about 15 min)

27a-1 Remove the LCD panel Assembly. (See procedure 26)

27a-2 Remove the four (4) screws marked [180a]. The gear can then be removed. (Fig.25)

27b Hinge (Time required: about 16 min)

27b-1 Remove the LCD panel Assembly. (See procedure 26)

27b-2 Remove the eight (8) screws marked [180b] to remove the LCD lower case. (Fig.25)

27b-3 Remove the two (2) screws marked [180] for each side. The hinges can then be removed. (Fig.26)

27c LCL Circuit Board (Time required: about 16 min)

27c-1 Remove the LCD panel assembly. (See procedure 26)

27c-2 Remove the LCD lower case. (See procedure 27b-2)

27c-3 Remove the five (5) screws marked [190a]. The LCL circuit board can then be removed. (Fig.27)

* When reinstalling the LCL circuit board, tighten the two screws marked [A] before others. (Fig.27)

27d LCR Circuit Board (Time required: about 16 min)

27d-1 Remove the LCD panel assembly. (See procedure 26)

27d-2 Remove the LCD lower case. (See procedure 27b-2)

27d-3 Remove the six (6) screws marked [190b]. The LCR circuit board can then be removed. (Fig.27)

* When reinstalling the LCR circuit board, tighten the two (2) screws marked [B] before others. (Fig.27)

27e LCD (Time required: about 16 min)

27e-1 Remove the LCD panel assembly. (See procedure 26)

27e-2 Remove the LCD lower case. (See procedure 27b-2)

27e-3 Remove the four (4) screws marked [190c]. The LCD can then be removed. (Fig.27)

■ DISASSEMBLY PROCEDURE (TRS-MS01)

1. Rear Panel (Time required: about 1 min)

1-1 Remove the eight (8) screws marked [30]. (Fig.1, Fig.2) (The screws to be removed are indicated by arrows on the panel.)

* When reinstalling the rear panel, confirm that the packing is not damaged to avoid air leakage.)

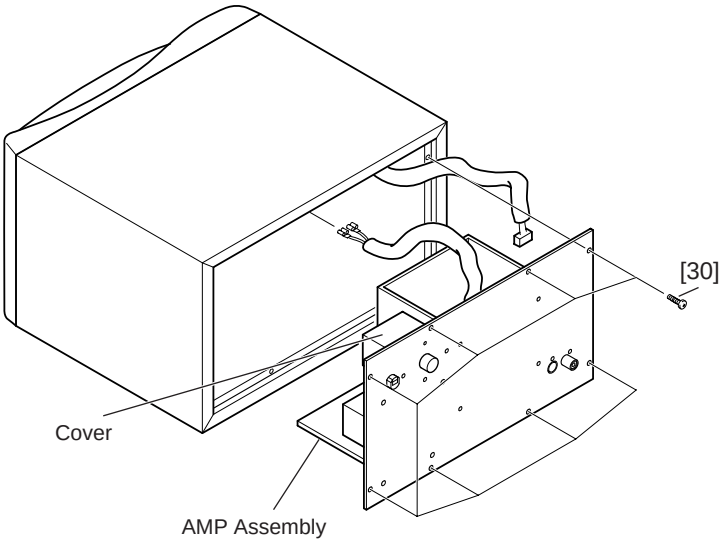

[30]: Bind Head Tapping Screw 4x20 MFZN2BL (EP040070)

(Fig.1)

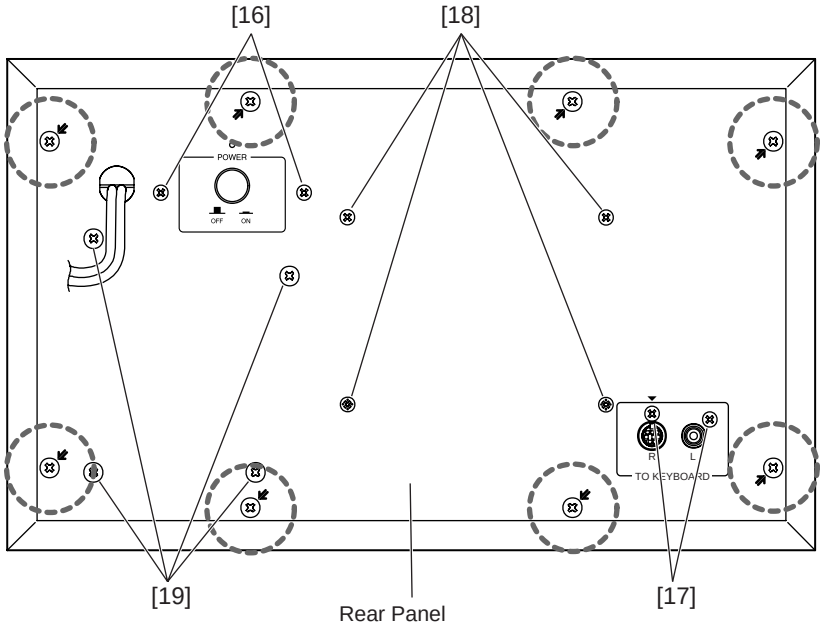

[16]: Bind Head Bonding Screw-B 3x10 MFC2BL (EN335030)
[17]: Bind Head Screw-P 3x12 MFC2BL (EX601360)
[18]: Bind Head Screw 3x8 MFC2BL (ED330086)
[19]: Bind Head Screw-S 4x8 MFC2BL (EK396010)

(Fig.2)

2. AMP Assembly (Time required: about 3 min)

2-1 Remove the rear panel. (See procedure 1)

2-2 Remove the two (2) screws marked [17], the four (4) screws marked [18], the four (4) screws marked [19]. The AMP assembly can then be removed. (Fig.2)

3. MAIN (C) [Power Switch] (Time required: about 2 min)

3-1 Remove the rear panel. (See procedure 1)

3-2 Remove the two (2) screws marked [16] to remove the cover. (Fig.2)

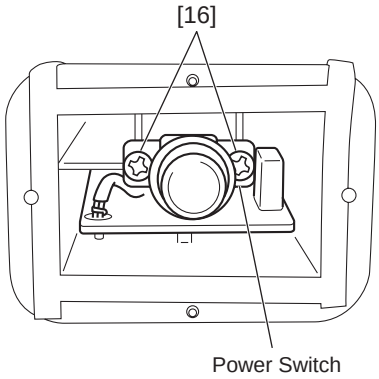

[16]: Bind Head Bonding Screw-B 3x10 MFC2BL (EN335030)

(Fig.3)

3-3 Remove the two (2) screws marked [16]. The MAIN (C) circuit board can then be removed. (Fig.3)

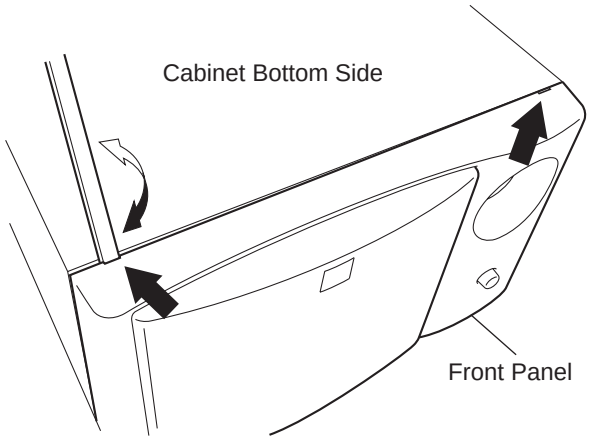

(Fig.4)

4. Front Panel (Time required: about 1 min)

4-1 Lay the unit upside down, insert a thin plate such as a ruler into the two slits on the bottom, then unclench slightly the front panel. (Fig4)

* Take great care not to damage the cabinet. Stop unclenching when a small clearance is formed.

4-2 Pull the front panel forward to remove. (Fig.5)

* The front panel is fixed on the cabinet by six dowels, so take care not to force diagonally too much. (Fig.1)

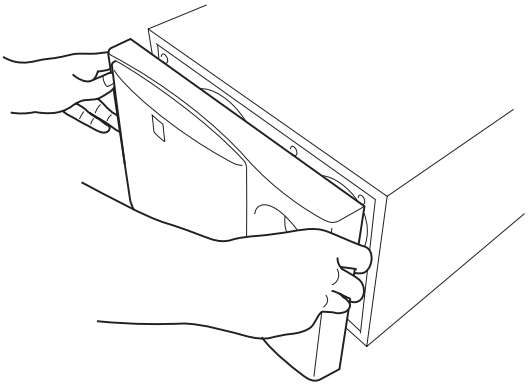

(Fig.5)

5. Front Grille Assembly (Time required: about 2 min)

5-1 Remove the front panel. (See procedure 4)

5-2 Remove the four (4) screws marked [24]. The fornt grille assembly can then be removed. (Fig.6)

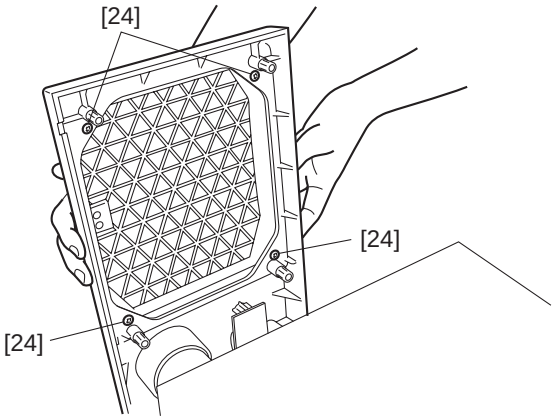

[24]: Bind Head Screw-P 3x10 MFZN2Y (EP600270)

(Fig.6)

6. Speaker (Time required: 2 min)

6-1 Remove the front panel. (See procedure 4)

6-2 Raise the front panel vertically. (Fig.7)

6-2 Remove the (4) screws marked [30]. The speaker can then be removed. (Fig.7)

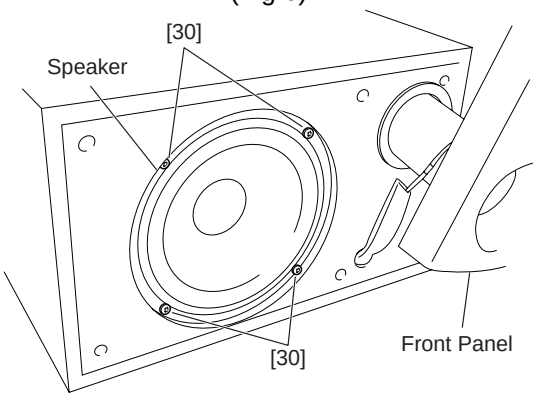

[30]: Bind Head Tapping Screw 4x20 MFZN2BL (EP040070)

(Fig.7)

■ LSI PIN DESCRIPTION

CONTENTS

- HD6417709SF133 (X2081A00) CPU 27
- HD6417709SHF200 (X2687A00) CPU 28
- M4A3-64/64-10VC (X2987A00) CPLD 29
- M66291GP (X2156A00) USB Controller 29
- μPD780031AYGK-XXX (X0031200) CPU 30
- PCM1730E-1/2K (X2077A00) DAC 30
- PCM1800 (XU770A00) A/D Converter 30
- T8F02TB-0102 (X0060A00) SWP50 31
- T8F02TB-0102 (X0060A00) SWP50 32
- TC160G22AF-1252 (XU135A00) MI2 33
- AK4393-VF-E2 (XW029A00) D/A Converter 33
- HD63266F (XI939A00) FDC 34
- UPD780031AYGK-NO1-9ET (XZ916100) LED DRIVER/SWITCH SCAN 34
- S1D13506F00A (XZ690A00) COLOR LCD / CRT / TV Controller 35

● HD6417709SF133 (X2081A00) CPU (SH3)

DM: IC63

PIN NO.	NAME	I/O	FUNCTION	PIN NO.	NAME	I/O	FUNCTION
1	MD1	I	Mode control	105	CKE/PTK5	I/O	CK enable / Port K
2	MD2	I		106	RAS3L/PTJ0	I/O	RAS address bus / Port J
3	Vcc(RTC)	-	Power supply +1.8 V	107	PTJ1	I/O	Port J
4	XTAL2	O	Cry stal oscillator	108	CASL/PTJ2	I/O	CAS address bus / Port J
5	EXTAL2	I		109	VssQ	-	Ground
6	Vss(RTC)	-	Ground	110	CASU/PTJ3	I/O	CAS address bus / Port J
7	NMI	I	Non-maskable interrupt request	111	VccQ	-	Power supply +3.3 V
8	IRQ0/IRL0/PTH0	I	Interrupt request / Port H	112	PTJ4	I/O	Port J
9	IRQ1/IRL1/PTH1	I		113	PTJ5	I/O	
10	IRQ2/IRL2/PTH2	I		114	DACK0/PTD5	I/O	DMA acknowledge / Port D
11	IRQ3/IRL3/PTH3	I		115	DACK1/PTD7	I/O	
12	IRQ4/PTH4	I		116	PTE6	I/O	Port E
13	D31/PTB7	I/O	Data bus / Port B	117	PTE3	I/O	
14	D30/PTB6	I/O		118	RAS3U/PTE2	I/O	RAS address bus / Port E
15	D29/PTB5	I/O		119	PTE1	I/O	Port E
16	D28/PTB4	I/O		120	TDO/PTE0	I/O	Test data / Port E
17	D27/PTB3	I/O		121	BACK	O	Bus acknowledge
18	D26/PTB2	I/O		122	BREQ	I	Bus request
19	VssQ	-	Ground	123	WAIT	I	Hardware wait request
20	D25/PTB1	I/O	Data bus / Port B	124	RESETM	I	Manual reset
21	VccQ	-	Power supply +3.3 V	125	ADTRG/PTH5	I	Analog trigger / Port H
22	D24/PTB0	I/O	Data bus / Port B	126	IOIS16/PTG7	I	Write protect / Port G
23	D23/PTA7	I/O	Data bus / Port A	127	ASEMD0/PTG6	I	ASE mode / Port G
24	D22/PTA6	I/O		128	ASEBRKAK/PTG5	I/O	ASE break acknowledge / Port G
25	D21/PTA5	I/O		129	PTG4/CKIO2	I/O	Port G / Clock output
26	D20/PTA4	I/O		130	AUDATA3/PTG3	I/O	AUD data / Port G
27	Vss	-	Ground	131	AUDATA2/PTG2	I/O	
28	D19/PTA3	I/O	Data bus / Port A	132	Vss	-	Ground
29	Vcc	-	Power supply +1.8 V	133	AUDATA1/PTG1	I/O	AUD data / Port G
30	D18/PTA2	I/O	Data bus / Port A	134	Vcc	-	Power supply +1.8 V
31	D17/PTA1	I/O		135	AUDATA0/PTG0	I/O	AUD data / Port G
32	D16/PTA0	I/O		136	TRST/PTF7/PINT15	I	Test reset / Port F / Port interruption
33	VssQ	-	Ground	137	TMS/PTF6/PINT14	I	Test mode switch / Port F / Port interruption
34	D15	I/O	Data bus	138	TDI/PTF5/PINT13	I	Test data / Port F / Port interruption
35	VccQ	-	Power supply +3.3 V	139	TCK/PTF4/PINT12	I	Test clock / Port F / Port interruption
36	D14	I/O	Data bus	140	IRLS3/PTF3/PINT11	I	Interrupt request / Port F / Port interruption
37	D13	I/O		141	IRL2/PTF2/PINT10	I	
38	D12	I/O		142	IRLS1/PTF1/PINT9	I	
39	D11	I/O		143	IRLS0/PTF0/PINT8	I	
40	D10	I/O		144	MD0	I	Mode control
41	D9	I/O		145	Vcc(PLL1)	-	Power supply +1.8 V
42	D8	I/O		146	CAP1	-	Capacitor
43	D7	I/O		147	Vss(PLL1)	-	Ground
44	D6	I/O		148	Vss(PLL2)	-	Ground
45	VssQ	-	Ground	149	CAP2	-	Capacitor
46	D5	I/O	Data bus	150	VCC(PLL2)	-	Power supply +1.8 V
47	VccQ	-	Power supply +3.3 V	151	AUDCK/PTH6	I	AUD clock / Port H
48	D4	I/O	Data bus	152	Vss	-	Ground
49	D3	I/O		153	Vss	-	
50	D2	I/O		154	Vcc	-	Power supply +1.8 V
51	D1	I/O		155	XTAL1	O	Crystal oscillator
52	D0	I/O		156	EXTAL1	I	
53	A0	O	Address bus	157	STATUS0/PTJ6	I/O	Processor status / Port J
54	A1	O		158	STATUS1/PTJ7	I/O	
55	A2	O		159	TCLK/PTH7	I/O	Timer clock / Port H
56	A3	O		160	/IRQOUT	O	Interrupt request output
57	VssQ	-	Ground	161	VssQ	-	Ground
58	A4	O	Address bus	162	CKIO	I/O	System clock input / output
59	VccQ	-	Power supply +3.3 V	163	VccQ	-	Power supply +3.3 V
60	A5	O	Address bus	164	TXD0/SCPT0	O	Data transmission / SCI port
61	A6	O		165	SCK0/SCPT1	I/O	Serial clock / SCI port
62	A7	O		166	TXD1/SCPT2	O	Data transmission / SCI port
63	A8	O		167	SCK1/SCPT3	I/O	Serial clock / SCI port
64	A9	O		168	TXD2/SCPT4	O	Data transmission / SCI port
65	A10	O		169	SCK2/SCPT5	I/O	Serial clock / SCI port
66	A11	O		170	RTS2/SCPT6	I/O	Transmit request / SCI port
67	A12	O		171	RXD0/SCPT0	I	Data reception / SCI port
68	A13	O		172	RXD1/SCPT2	I	
69	VssQ	-	Ground	173	Vss	-	Ground
70	A14	O	Address bus	174	RXD2/SCPT4	I	Data reception / SCI port
71	VccQ	-	Power supply +3.3 V	175	Vcc	-	Power supply +1.8 V
72	A15	O	Address bus	176	CTS2/IRQ5/SCPT7	I	Transmit clear / Interrupt request / SCI port
73	A16	O		177	MCS7/PTC7/PINT7	I/O	Mask ROM chip select / Port C / Port interruption
74	A17	O		178	MCS6/PTC6/PINT6	I/O	
75	A18	O		179	MCS5/PTC5/PINT5	I/O	
76	A19	O		180	MCS4/PTC4/PINT4	I/O	
77	A20	O		181	VssQ	-	Ground
78	A21	O		182	WAKEUP/PTD3	I/O	Standby mode Interrupt request output / Port D
79	Vss	-	Ground	183	VccQ	-	Power supply +3.3 V
80	A22	O	Address bus	184	RESETOUT/PTD2	I/O	Reset output / Port D
81	Vcc	-	Power supply +1.8 V	185	MCS3/PTC3/PINT3	I/O	Mask ROM chip select / Port C / Port interruption
82	A23	O	Address bus	186	MCS2/PTC2/PINT2	I/O	
83	VssQ	-	Ground	187	MCS1/PTC1/PINT1	I/O	
84	A24	O	Address bus	188	MCS0/PTC0/PINT0	I/O	
85	VccQ	-	Power supply +3.3 V	189	DRAK0/PTD1	I/O	DMA acknowledge / Port D
86	A25	O	Address bus	190	DRAK1/PTD0	I/O	
87	BS/PTK4	I/O	Bus cycle / Port K	191	DREQ0/PTD4	I	DMA request / Port D
88	RD	O	Read strobe	192	DREQ1/PTD6	I	
89	WE0/DQMLL	O	Select signal (D7-D0) / D QM (SDRAM)	193	RESETP	I	Power on reset
90	WE1/DQMLU/WE	O	Select signal (D15-D8) / D QM (SDRAM) / Write enable	194	CA	I	Chip active
91	WE2/DQMUU/CIORDPTK6	I/O	Select signal (D23-D16) / D QM (SDRAM) / I/O read / Port K	195	MD3	I	Mode control
92	WE3/DQMUU/SIOWRPTK7	I/O	Select signal (D31-D24) / D QM (SDRAM) / I/O write / Port K	196	MD4	I	
93	RD/WR	O	Read / Write	197	MD5	I	
94	AUDSYNC/PTE7	I/O	AUD cycle / Port E	198	AVss	-	Analog ground
95	VssQ	-	Ground	199	AN0/PTL0	I	Analog input / Port L
96	CS0/MCS0	O	Chip select / Mask ROM chip select	200	AN1/PTL1	I	
97	VccQ	-	Power supply +3.3V	201	AN2/PTL2	I	
98	CS2/PTK0	I/O	Chip select / Port K	202	AN3/PTL3	I	
99	CS3/PTK1	I/O		203	AN4/PTL4	I	
100	CS4/PTK2	I/O		204	AN5/PTL5	I	
101	CS5/CE1A/PTK3	I/O	Chip select / Chip enable / Port K	205	AVcc	-	Analog power supply +3.3 V
102	CS6/CE1B	O	Chip select / Chip enable	206	AN6/DA1/PTL6	I/O	Analog input / Analog output / Port L
103	CE2A/PTE4	I/O	Chip enable / Port E	207	AN7/DA0/PTL7	I/O	
104	CE2B/PTE5	I/O		208	AVss	-	Analog ground

● HD6417709SHF200 (X2687A00) CPU (SH3)

DM: IC9

PIN NO.	NAME	I/O	FUNCTION
1	MD1	I	Mode control
2	MD2	I	
3	Vcc(RTC)	-	Power supply +1.8 V
4	XTAL2	O	Crystal oscillator
5	EXTAL2	I	
6	Vss(RTC)	-	Ground
7	NMI	I	Non-maskable interrupt request
8	IRQ0/IRL0/PTH0	I	Interrupt request / Port H
9	IRQ1/IRL1/PTH1	I	
10	IRQ2/IRL2/PTH2	I	
11	IRQ3/IRL3/PTH3	I	
12	IRQ4/PTH4	I	
13	D31/PTB7	I/O	Data bus / Port B
14	D30/PTB6	I/O	
15	D29/PTB5	I/O	
16	D28/PTB4	I/O	
17	D27/PTB3	I/O	
18	D26/PTB2	I/O	
19	VssQ	-	Ground
20	D25/PTB1	I/O	Data bus / Port B
21	VccQ	-	Power supply +3.3 V
22	D24/PTB0	I/O	Data bus / Port B
23	D23/PTA7	I/O	Data bus / Port A
24	D22/PTA6	I/O	
25	D21/PTA5	I/O	
26	D20/PTA4	I/O	
27	Vss	-	Ground
28	D19/PTA3	I/O	Data bus / Port A
29	Vcc	-	Power supply +1.8 V
30	D18/PTA2	I/O	Data bus / Port A
31	D17/PTA1	I/O	
32	D16/PTA0	I/O	
33	VssQ	-	Ground
34	D15	I/O	Data bus
35	VccQ	-	Power supply +3.3 V
36	D14	I/O	Data bus
37	D13	I/O	
38	D12	I/O	
39	D11	I/O	
40	D10	I/O	
41	D9	I/O	
42	D8	I/O	
43	D7	I/O	
44	D6	I/O	
45	VssQ	-	Ground
46	D5	I/O	Data bus
47	VccQ	-	Power supply +3.3 V
48	D4	I/O	Data bus
49	D3	I/O	
50	D2	I/O	
51	D1	I/O	
52	D0	I/O	
53	A0	O	Address bus
54	A1	O	
55	A2	O	
56	A3	O	
57	VssQ	-	Ground
58	A4	O	Address bus
59	VccQ	-	Power supply +3.3 V
60	A5	O	Address bus
61	A6	O	
62	A7	O	
63	A8	O	
64	A9	O	
65	A10	O	
66	A11	O	
67	A12	O	
68	A13	O	
69	VssQ	-	Ground
70	A14	O	Address bus
71	VccQ	-	Power supply +3.3 V
72	A15	O	Address bus
73	A16	O	
74	A17	O	
75	A18	O	
76	A19	O	
77	A20	O	
78	A21	O	
79	Vss	-	Ground
80	A22	O	Address bus
81	Vcc	-	Power supply +1.8 V
82	A23	O	Address bus
83	VssQ	-	Ground
84	A24	O	Address bus
85	VccQ	-	Power supply +3.3 V
86	A25	O	Address bus
87	BS/PTK4	I/O	Bus cycle / Port K
88	RD	O	Read strobe
89	WE0/DQMLL	O	Select signal (D7-D0) / D QM (SDRAM)
90	WE1/DQMLU/WE	O	Select signal (D15-D8) / D QM (SDRAM) / Write enable
91	WE2/DQMUL/ICIORD/PTK6	I/O	Select signal (D23-D16) / D QM (SDRAM) / I/O read / Port K
92	WE3/DQMUU/ISIOWR/PTK7	I/O	Select signal (D31-D24) / D QM (SDRAM) / I/O write / Port K
93	RD/WR	O	Read / Write
94	AUDSYNC/PTE7	I/O	AUD cycle / Port E
95	VssQ	-	Ground
96	CS0/MCS0	O	Chip select / Mask ROM chip select
97	VccQ	-	Power supply +3.3V
98	CS2/PTK0	I/O	Chip select / Port K
99	CS3/PTK1	I/O	
100	CS4/PTK2	I/O	
101	CS5/CE1A/PTK3	I/O	Chip select / Chip enable / Port K
102	CS6/CE1B	O	Chip select / Chip enable
103	CE2A/PTE4	I/O	Chip enable / Port E
104	CE2B/PTE5	I/O	
105	CKE/PTK5	I/O	CK enable / Port
106	RAS3L/PTJ0	I/O	RAS address bus / Port J
107	PTJ1	I/O	Port J
108	CASL/PTJ2	I/O	CAS address bus / Port J
109	VssQ	-	Ground
110	CASU/PTJ3	I/O	CAS address bus / Port J
111	VccQ	-	Power supply +3.3 V
112	PTJ4	I/O	Port J
113	PTJ5	I/O	
114	DACK0/PTD5	I/O	DMA acknowledge / Port D
115	DACK1/PTD7	I/O	
116	PTE6	I/O	Port E
117	PTE3	I/O	
118	RAS3U/PTE2	I/O	RAS address bus / Port E
119	PTE1	I/O	Port E
120	TDO/PTE0	I/O	Test data / Port E
121	BACK	O	Bus acknowledge
122	BREQ	I	Bus request
123	WAIT	I	Hardware wait request
124	RESETM	I	Manual reset
125	ADTRG/PTH5	I	Analog trigger / Port H
126	IOIS16/PTG7	I	Write protect / Port G
127	ASEMD0/PTG6	I	ASE mode / Port G
128	ASEBRKAK/PTG5	I/O	ASE break acknowledge / Port G
129	PTG4/CKIO2	I/O	Port G / Clock output
130	AUDATA3/PTG3	I/O	AUD data / Port G
131	AUDATA2/PTG2	I/O	
132	Vss	-	Ground
133	AUDATA1/PTG1	I/O	AUD data / Port G
134	Vcc	-	Power supply +1.8 V
135	AUDATA0/PTG0	I/O	AUD data / Port G
136	TRST/PTF7/PINT15	I	Test reset / Port F / Port interruption
137	TMS/PTF6/PINT14	I	Test mode switch / Port F / Port interruption
138	TDI/PTF5/PINT13	I	Test data / Port F / Port interruption
139	TCK/PTF4/PINT12	I	Test clock / Port F / Port interruption
140	IRLS3/PTF3/PINT11	I	Interrupt request / Port F / Port interruption
141	IRL2/PTF2/PINT10	I	
142	IRLS1/PTF1/PINT9	I	
143	IRLS0/PTF0/PINT8	I	
144	MD0	I	Mode control
145	Vcc(PLL1)	-	Power supply +1.8 V
146	CAP1	-	Capacitor
147	Vss(PLL1)	-	Ground
148	Vss(PLL2)	-	Ground
149	CAP2	-	Capacitor
150	VCC(PLL2)	-	Power supply +1.8 V
151	AUDCK/PTH6	I	AUD clock / Port H
152	Vss	-	Ground
153	Vss	-	
154	Vcc	-	Power supply +1.8 V
155	XTAL1	O	Crystal oscillator
156	EXTAL1	I	
157	STATUS0/PTJ6	I/O	Processor status / Port J
158	STATUS1/PTJ7	I/O	
159	TCLK/PTH7	I/O	Timer clock / Port H
160	/IRQOUT	O	Interrupt request output
161	VssQ	-	Ground
162	CKIO	I/O	System clock input / output
163	VccQ	-	Power supply +3.3 V
164	TXD0/SCPT0	O	Data transmission / SCI port
165	SCK0/SCPT1	I/O	Serial clock / SCI port
166	TXD1/SCPT2	O	Data transmission / SCI port
167	SCK1/SCPT3	I/O	Serial clock / SCI port
168	TXD2/SCPT4	O	Data transmission / SCI port
169	SCK2/SCPT5	I/O	Serial clock / SCI port
170	RTS2/SCPT6	I/O	Transmit request / SCI port
171	RXD0/SCPT0	I	Data reception / SCI port
172	RXD1/SCPT2	I	
173	Vss	-	Ground
174	RXD2/SCPT4	I	Data reception / SCI port
175	Vcc	-	Power supply +1.8 V
176	CTS2/IRQ5/SCPT7	I	Transmit clear / Interrupt request / SCI port
177	MCS7/PTC7/PINT	I/O	Mask ROM chip select / Port C / Port interruption
178	7	I/O	
179	MCS6/PTC6/PINT	I/O	
180	6	I/O	
181	MCS5/PTC5/PINT	-	Ground
182	5	I/O	Standby mode Interrupt request output / Port D
183	MCS4/PTC4/PINT	-	Power supply +3.3 V
184	4	I/O	Reset output / Port D
185	VssQ	I/O	
186	WAKEUP/PTD3	I/O	Mask ROM chip select / Port C / Port interruption
187	VccQ	I/O	
188	RESETOUT/PTD2	I/O	
189	MCS3/PTC3/PINT	I/O	DMA acknowledge / Port D
190	3	I/O	
191	MCS2/PTC2/PINT	I	DMA request / Port D
192	2	I	
193	MCS1/PTC1/PINT	I	Power on reset
194	1	I	Chip active
195	MCS0/PTC0/PINT	I	Mode control
196	0	I	
197	DRAK0/PTD1	I	
198	DRAK1/PTD0	-	Analog ground
199	DREQ0/PTD4	I	Analog input / Port L
200	DREQ1/PTD6	I	
201	RESETP	I	
202	CA	I	
203	MD3	I	
204	MD4	I	
205	MD5	-	Analog power supply +3.3 V
206	AVss	I/O	Analog input / Analog output / Port L
207	AN0/PTL0	I/O	
208	AN1/PTL1	-	Analog ground

● M4A3-64/64-10VC (X2987A00) CPLD

PNL: IC2
PNR: IC2

PIN NO.	NAME	I/O	FUNCTION	PIN NO.	NAME	I/O	FUNCTION
1	GND		Ground	51	GND		Ground
2	TDI	I	Test data in	52	ENABLE		Program
3	A1	I/O	Data bus block A	53	C1	I/O	Data bus block C
4	A3	I/O	Data bus block A	54	C3	I/O	Data bus block C
5	A5	I/O	Data bus block A	55	C5	I/O	Data bus block C
6	A7	I/O	Data bus block A	56	C7	I/O	Data bus block C
7	A9	I/O	Data bus block A	57	C9	I/O	Data bus block C
8	A11	I/O	Data bus block A	58	C11	I/O	Data bus block C
9	A13	I/O	Data bus block A	59	C13	I/O	Data bus block C
10	A15	I/O	Data bus block A	60	C15	I/O	Data bus block C
11	I0/CLK1	I		61	I3/CLK2		
12	VCC		Power supply	62	VCC		Power supply
13	GND		Ground	63	GND		Ground
14	I1/CLK1	I		64	I4/CLK3		
15	B15	I/O	Data bus block B	65	D15	I/O	Data bus block D
16	B13	I/O	Data bus block B	66	D13	I/O	Data bus block D
17	B11	I/O	Data bus block B	67	D11	I/O	Data bus block D
18	B9	I/O	Data bus block B	68	D9	I/O	Data bus block D
19	B7	I/O	Data bus block B	69	D7	I/O	Data bus block D
20	B5	I/O	Data bus block B	70	D5	I/O	Data bus block D
21	B3	I/O	Data bus block B	71	D3	I/O	Data bus block D
22	B1	I/O	Data bus block B	72	D1	I/O	Data bus block D
23	TMS		Test mode select	73	TRST		Test reset
24	TCK		Test clock	74	TDO	O	Test data out
25	GND		Ground	75	GND		Ground
26	GND		Ground	76	GND		Ground
27	GND		Ground	77	GND		Ground
28	B14	I/O	Data bus block B	78	D14	I/O	Data bus block D
29	B12	I/O	Data bus block B	79	D12	I/O	Data bus block D
30	B10	I/O	Data bus block B	80	D10	I/O	Data bus block D
31	B8	I/O	Data bus block B	81	D8	I/O	Data bus block D
32	B6	I/O	Data bus block B	82	D6	I/O	Data bus block D
33	B4	I/O	Data bus block B	83	D4	I/O	Data bus block D
34	B2	I/O	Data bus block B	84	D2	I/O	Data bus block D
35	B0	I/O	Data bus block B	85	D0	I/O	Data bus block D
36	I2	I		86	I5	I	
37	VCC		Power supply	87	VCC		Power supply
38	GND		Ground	88	GND		Ground
39	GND		Ground	89	GND		Ground
40	VCC		Power supply	90	VCC		Power supply
41	C0	I/O	Data bus block C	91	A0	I/O	Data bus block A
42	C2	I/O	Data bus block C	92	A2	I/O	Data bus block A
43	C4	I/O	Data bus block C	93	A4	I/O	Data bus block A
44	C6	I/O	Data bus block C	94	A6	I/O	Data bus block A
45	C8	I/O	Data bus block C	95	A8	I/O	Data bus block A
46	C10	I/O	Data bus block C	96	A10	I/O	Data bus block A
47	C12	I/O	Data bus block C	97	A12	I/O	Data bus block A
48	C14	I/O	Data bus block C	98	A14	I/O	Data bus block A
49	GND		Ground	99	GND		Ground
50	GND		Ground	100	GND		Ground

● M66291GP (X2156A00) USB Controller

DM: IC7

PIN NO.	NAME	I/O	FUNCTION	PIN NO.	NAME	I/O	FUNCTION
1	Core Vcc		Core power supply	25	D2	I/O	Data bus
2	GND		Ground	26	D3	I/O	
3	D-	I/O	USB data (-)	27	D4	I/O	
4	D+	I/O	USB data (+)	28	D5	I/O	
5	Vbus	I	V bus input	29	D6	I/O	
6	Tr ON	O	Tr ON output	30	D7	I/O	
7	TEST	I	TEST input	31	D8/P0	I/O	
8	/Dack1	I	DMA reception signal 1	32	D9/P1	I/O	
9	/Dreq1	O	DMA request 1	33	D10/P2	I/O	
10	/TC1	I	TC input	34	D11/P3	I/O	
11	/INT1//SOF	O	Interrupt 1/SOF output	35	IOVcc		I/O power supply
12	IOVcc		I/O power supply	36	GND		Ground
13	Xout	O	Output for oscillation	37	D12/P4	I/O	Data bus
14	Xin	I	Input for oscillation	38	D13/P5	I/O	
15	GND		Ground	39	D14/P6	I/O	
16	Core Vcc		Core power supply	40	D15/A0	I/O	
17	A1	I	Address bus	41	/HWR//BYTE	I	Highlight strobe/bus width select
18	A2	I		42	/INT0	O	Interrupt 0
19	A3	I		43	/RD	I	Read strobe
20	A4	I		44	/LWR	I	Low write strobe
21	A5	I		45	/CS	I	Chip select
22	A6	I		46	/RST	I	Reset signal
23	D0	I/O	Data bus	47	/Dreq0	O	DMA request 0
24	D1	I/O		48	/Dack0	I	DMA reception signal 0

● μPD780031AYGK-XXX (X0031200) CPU

EMKS-N: IC1

PIN NO.	NAME	I/O	FUNCTION	PIN NO.	NAME	I/O	FUNCTION
1	P50/A8	I/O	Address bus	33	P10/ANI0	I	Port1
2	P51/A9	I/O	Address bus	34	AV_{REF}	I	Analog reference voltage
3	P52/A10	I/O	Address bus	35	AV_{DD}		Analog power supply
4	P53/A11	I/O	Address bus	36	RESET	I	Reset
5	P54/A12	I/O	Address bus	37	XT2		Subsystem clock
6	P55/A13	I/O	Address bus	38	XT1	I	Subsystem clock
7	P56/A14	I/O	Address bus	39	IC	I	Internally connected
8	P57/A15	I/O	Address bus	40	X2		Main system clock
9	$V_{SS}0$		Ground	41	X1	I	Main system clock
10	$V_{DD}0$		Power supply	42	$V_{SS}1$		Ground
11	P30	I/O	Port3	43	P00/INTP0	I/O	Port0
12	P31	I/O	Port3	44	P01/INTP1	I/O	Port0
13	P32/SDA0	I/O	Port3	45	P02/INTP2	I/O	Port0
14	P33/SCL0	I/O	Port3	46	P03/INTP3/ADTRG	I/O	Port0
15	P34/SI31	I/O	Port3	47	P70/TI00/TO0	I/O	Port7
16	P35/SO31	I/O	Port3	48	P71/TI01	I/O	Port7
17	P36/SCK31	I/O	Port3	49	P72/TI50/TO50	I/O	Port7
18	P20/SI30	I/O	Port2	50	P73/TI51/TO51	I/O	Port7
19	P21/SO30	I/O	Port2	51	P74/PLC	I/O	Port7
20	P22/SCK30	I/O	Port2	52	P75/BUZ	I/O	Port7
21	P23/RXD0	I/O	Port2	53	P64/RD	I/O	Port6
22	P24/TXD0	I/O	Port2	54	P65/WR	I/O	Port6
23	P25/ASCK0	I/O	Port2	55	P66/WAIT	I/O	Port6
24	$V_{DD}1$		Power supply	56	P67/ASTB	I/O	Port6
25	AV_{SS}		Analog ground	57	P40/AD0	I/O	Port4
26	P17/ANI7	I	Port1	58	P41/AD1	I/O	Port4
27	P16/ANI6	I	Port1	59	P42/AD2	I/O	Port4
28	P15/ANI5	I	Port1	60	P43/AD3	I/O	Port4
29	P14/ANI4	I	Port1	61	P44/AD4	I/O	Port4
30	P13/ANI3	I	Port1	62	P45/AD5	I/O	Port4
31	P12/ANI2	I	Port1	63	P46/AD6	I/O	Port4
32	P11/ANI1	I	Port1	64	P47/AD7	I/O	Port4

● PCM1730E-1/2K (X2077A00) DAC (Digital to Analog Converter)

DM: IC48

PIN NO.	NAME	I/O	FUNCTION	PIN NO.	NAME	I/O	FUNCTION
1	/RST	I	Reset	15	MUTE	I	Analog output mute control
2	ZEROL	O	Zero flag for L-channel	16	IOUTR-	O	R-channel analog current output -R-
3	ZEROR	O	Zero flag for R-channel	17	IOUTR+	O	channel analog current output +
4	LRCK	I	Left and right clock	18	AGND1		Analog ground
5	DATA	I	Serial audio data input	19	VCOM1		Internal bias de-coupling pin
6	BCK	I	Bit clock input	20	VCOM2		Common voltage for I/V
7	SCKI	I	System clock input	21	IREF		Output current reference bias pin
8	DGND		Digital ground	22	VCOM3		Internal bias de-coupling pin
9	VDD		Digital supply, +3.3V	23	VCC1		Analog supply, +5 V
10	DEPMP0	I	De-emphasis control	24	VCC2		Analog supply, +5 V
11	DEMP1	I		25	IOUTL+	O	L-channel analog current output +
12	FMT0	I	Audio data format select	26	IOUTL-	O	L-channel analog current output -Ana log
13	FMT1	I		27	AGND2	I	ground
14	FMT2	I		28	VCC3	I	Analog power supply, +5 V

● PCM1800E / 2K (XU770A00) A/D Converter

DM: IC46

PIN NO.	NAME	I/O	FUNCTION	PIN NO.	NAME	I/O	FUNCTION
1	VINL	I	Analog input (L ch.)	13	LRCK	I/O	Sampling clock input/output
2	VREF1	-	Reference 1 decoupling cap.	14	BCK	I/O	Bit clock input/output
3	REFCOM	-	Reference decoupling common	15	DOUT	O	Audio data output
4	VREF2	-	Reference 2 decoupling cap.	16	SYSCK	I	System clock input
5	VINR	I	Analog input (R ch.)	17	DGND	-	Digital ground
6	RSTB	I	Reset input active “L”	18	VDD	-	Power supply +5V
7	BYPAS	I	LCF bypass control	19	CINNR	-	Anti-aliasing filter cap. (-) R ch.
8	FMT0	I	Audio data format 0	20	CINPR	-	Anti-aliasing filter cap. (+) R ch.
9	FMT1	I	Audio data format 1	21	CINNL	-	Anti-aliasing filter cap. (-) L ch.
10	MODE0	I	Master/Slave mode selection 0	22	CINPL	-	Anti-aliasing filter cap. (+) L ch.
11	MODE1	I	Master/Slave mode selection 1	23	VCC	-	Analog power supply
12	FSYNC	I/O	Frame sync. input/output	24	AGND	-	Analog ground

● **T8F02TB-0102** (X0060A00) **SWP50** (Tone Generator)

DM: IC39,IC40

PIN NO.	OUTER NO.	NAME	I/O	FUNCTION
1	E5	VSS2	-	Ground
2	D4	VDDC	-	Power supply +1.5 V
3	C3	CD15	I/O	Data bus of internal register
4	B2	CD13	I/O	
5	A1	CD14	I/O	
6	D5	CD6	I/O	
7	E6	CD2	I/O	
8	C4	CD9	I/O	
9	B3	CD11	I/O	
10	A2	CD12	I/O	
11	A3	CD10	I/O	
12	D6	CD1	I/O	
13	E7	VSS	-	Ground
14	C5	CD5	I/O	Data bus of unternal register
15	B4	CD8	I/O	
16	A4	CD7	I/O	
17	D7	VSS2	-	Ground
18	C6	CD0	I/O	Data bus of unternal register
19	E8	VSS	-	Ground
20	D8	VDDS	-	Power supply +3 V
21	B5	CD4	I/O	Data bus of internal register
22	A5	CD3	I/O	
23	C7	CA2	I	Address bus of internal regisuter
24	B6	CA0	I	
25	E9	CA8	I	
26	D9	CA9	I	
27	C8	CA5	I	
28	A6	CA1	I	
29	B7	CA3	I	
30	A7	CA4	I	
31	E10	VSS2	-	Ground
32	D10	VDDC	-	Power supply +1.5 V
33	C9	CA10	I	Address bus of internal regisuter
34	B8	CA6	I	
35	A8	CA7	I	
36	B9	CA11	I	
37	E11	CA14	I	
38	D11	CA15	I	
39	C10	CA13	I	
40	A9	CA12	I	
41	B10	CSN0	I	Chip select
42	A10	CSN1	I	
43	E12	VSS	-	Ground
44	D12	VDDS	-	Power supply +3 V
45	C11	WRN	I	Write strobe
46	B11	RDN	I	Read strobe
47	A11	WAIT0	O	Hardware wait request
48	C12	IRQ0	O	Interrupt request
49	B12	DREQ0	O	
50	E13	TCK	I	Test pin
51	D13	TRST	I	
52	C13	VSS	-	Ground
53	A12	XO	O	Crystal osc. output
54	B13	XI	I	Crystal osc. input
55	A13	VDDS	-	Power supply +3 V
56	A14	SLAVE	I	Master/Slave select
57	E14	TMS	I	Test pin
58	D14	TDO	O	
59	C14	ICN	I	Initial clear
60	B14	RFCLK0	O	PLL Clock
61	B15	PLL_TSTN	I	Power supply
62	C15	PLL_BP	I	
63	D15	VDDS	-	Power supply +3 V
64	E15	VSS	-	Ground
65	A15	RFCLK1	I	PLL Clock
66	A16	VDDC	-	Power supply +1.5 V
67	B16	TMODE	I	Test pin
68	C16	PLL_AVD	-	Power supply (PLL)
69	D16	NC	-	Not used
70	E16	NC	-	Not used
71	A17	PLL_AVS	-	Power supply (PLL)
72	B17	TEST1	I	Test pin
73	A18	VSS	-	Ground
74	C17	SY1	I	Sync. clock
75	D17	VDDC	-	Power supply +1.5 V
76	E17	VSS2	-	Ground
77	B18	KONTRG0	O	Key on data
78	A19	KONTRG1	I	
79	C18	CK512	O	
80	B19	CK128	O	Master clock (256 Fs)
81	D18	BCLK	O	Master clock (64 Fs)
82	E18	SY0	O	Sync. clock
83	C19	HMA20	O	Wave memory address bus
84	A20	HMA21	O	
85	B20	HMA19	O	
86	C20	HMA18	O	
87	D19	VDDS	-	Power supply +1.5 V
88	E19	VSS	-	Ground
89	A21	HMA9	O	Wave memory address bus
90	B21	HMA7	O	
91	A22	HMA6	O	
92	D20	HMA8	O	
93	C21	HMA10	O	
94	E20	HMA17	O	
95	D21	VDDS	-	Power supply +1.5 V
96	B22	HMA11	O	Wave memory address bus
97	A23	HMA4	O	
98	C22	HMA5	O	
99	B23	HMA13	O	
100	E21	VSS	-	Ground
101	D22	HMA12	O	Wave memory address bus
102	C23	HMA3	O	
103	A24	HMA14	O	
104	B24	HMA2	O	
105	A25	HMA1	O	
106	E22	VSS2	-	Ground
107	D23	VDDC	-	Power supply +1.5 V
108	C24	HMA15	O	Wave memory address bus
109	B25	HMA16	O	
110	A26	HMA22	O	
111	E23	HMA25	O	
112	F22	VDDS	-	Power supply +3 V
113	D24	HMA27	O	Wave memory address bus
114	C25	HMA0	O	
115	B26	HMA23	O	
116	C26	HMA24	O	
117	F23	VDDS	-	Power supply +3 V
118	G22	HMA26	O	Wave memory address bus
119	E24	HMA30	O	
120	D25	HMA28	O	
121	D26	HMA29	O	
122	G23	LMA17	O	Wave memory address bus (Lower data memory)
123	F24	LMA19	O	
124	H22	VSS	-	Ground
125	H23	VDDS	-	Power supply +3 V
126	E25	LMA20	O	Wave memory address bus (Lower data memory)
127	E26	LMA21	O	
128	G24	LMA9	O	
129	F25	LMA18	O	
130	J22	LMA12	O	
131	J23	LMA4	O	
132	H24	LMA6	O	
133	F26	LMA8	O	
134	G25	LMA7	O	
135	G26	LMA10	O	
136	K22	VSS2	-	Ground
137	K23	VDDC	-	Power supply +1.5 V
138	J24	LMA13	O	Wave memory address bus (Lower data memory)
139	H25	LMA11	O	
140	H26	LMA5	O	
141	J25	LMA3	O	
142	L22	LMA16	O	
143	L23	LMA0	O	
144	K24	LMA2	O	
145	J26	LMA14	O	
146	K25	LMA15	O	
147	K26	LMA1	O	
148	M22	VSS	-	Ground
149	M23	VDDS	-	Power supply +3 V
150	L24	LMA22	O	Wave memory address bus (Lower data memory)
151	L25	LMA23	O	
152	L26	LMA24	O	
153	M24	LMA27	O	
154	M25	LMA28	O	
155	N22	LMA25	O	
156	N23	LMA26	O	
157	N24	LMA30	O	
158	M26	LMA29	O	
159	N25	MOEN	O	Wave memory output enable
160	N26	MWEN	O	Wave memory write enable
161	P26	LMD15	I/O	Wave memory data bus (Lower 16 bit)
162	P22	VSS	-	Ground
163	P23	VDDS	-	Power supply +3 V
164	P24	LMD13	I/O	Wave memory data bus (Lower 16 bit)
165	P25	LMD14	I/O	
166	R25	LMD11	I/O	
167	R24	LMD10	I/O	
168	R23	VDDS	-	Power supply +3 V
169	R22	VSS	-	Ground
170	R26	LMD12	I/O	Wave memory data bus (Lower 16 bit)
171	T26	LMD9	I/O	
172	T25	LMD8	I/O	
173	T24	LMD7	I/O	
174	T23	VSS2	-	Ground
175	T22	VSS	-	Ground
176	U26	LMD6	I/O	Wave memory data bus (Lower 16 bit)
177	U25	LMD5	I/O	
178	V26	LMD3	I/O	
179	U24	LMD4	I/O	
180	U23	VDDC	-	Power supply +3 V
181	U22	VSS2	-	Ground
182	V25	LMD2	I/O	Wave memory data bus (Lower 16 bit)
183	W26	LMD0	I/O	
184	V24	LMD1	I/O	
185	W25	DCSL0	O	
186	V23	VDDS	-	Power supply +3 V
187	V22	VDDC	-	Power supply +1.5 V
188	W24	DCSL1	O	
189	Y26	DQML3	O	MASK signal
190	Y25	DQML1	O	
191	Y24	DMAL14	O	Address bus (DIMM, SDRAM)
192	W23	VDDS	-	Power supply +3 V
193	W22	VSS	-	Ground
194	AA26	DMAL13	O	Address bus (DIMM, SDRAM)
195	AA25	DMAL12	O	
196	AB26	DMAL9	O	
197	Y23	VSS	-	Ground
198	AA24	DMAL11	O	Address bus (DIMM, SDRAM)
199	Y22	VSS	-	Ground
200	AA23	DMAL10	O	Address bus (DIMM, SDRAM)
201	AB25	DMAL8	O	
202	AC26	DMAL6	O	
203	AB24	DMAL7	O	
204	AC25	DMAL5	O	
205	AA22	VSS2	-	Ground
206	AB23	VSS	-	Ground
207	AC24	DMAL4	O	Address bus (DIMM, SDRAM)
208	AD26	DMAL3	O	
209	AD25	DMAL2	O	
210	AE26	DMAL0	O	

PIN NO.	OUTER NO.	NAME	I/O	FUNCTION
211	AB22	VSS2	-	Ground
212	AC23	VDDC	-	Power supply +1.5 V
213	AD24	DMAL1	O	Address bus (DIMM, SDRAM)
214	AE25	DCSL2	O	
215	AF26	DRAS0	O	
216	AC22	DCAS0	O	
217	AB21	VDDS	-	Power supply +3 V
218	AD23	DCLKIN	I	
219	AE24	DQML2	O	MASK signal
220	AF25	DCSL3	O	
221	AF24	DQML0	O	MASK signal
222	AC21	VDDS	-	Power supply +3 V
223	AB20	VSS	-	Ground
224	AD22	DWEN0	O	
225	AE23	DCLK0	O	
226	AF23	DCLK1	O	
227	AC20	DCLKE	O	
228	AD21	HMD13	I/O	Wave memory data bus (Upper data memory)
229	AB19	VSS	-	Ground
230	AC19	VDDS	-	Power supply +3 V
231	AE22	HMD15	I/O	
232	AF22	HMD14	I/O	Wave memory data bus (Upper data memory)
233	AD20	HMD10	I/O	
234	AE21	HMD12	I/O	
235	AB18	VDDC	-	Power supply +1.5 V
236	AC18	VDDS	-	Power supply +3 V
237	AD19	HMD7	I/O	
238	AF21	HMD11	I/O	Wave memory data bus (Upper data memory)
239	AE20	HMD9	I/O	
240	AF20	HMD8	I/O	
241	AB17	VSS2	-	Ground
242	AC17	VDDC	-	Power supply +1.5 V
243	AD18	HMD4	I/O	
244	AE19	HMD6	I/O	Wave memory data bus (Upper data memory)
245	AF19	HMD5	I/O	
246	AE18	HMD3	I/O	
247	AB16	VSS	-	Ground
248	AC16	VSS2	-	Ground
249	AD17	HMD1	I/O	
250	AF18	HMD2	I/O	Wave memory data bus (Upper data memory)
251	AE17	HMD0	I/O	
252	AF17	DCSH0	O	
253	AB15	VSS	-	Ground
254	AC15	VDDS	-	Power supply +3 V
255	AD16	DCSH1	O	
256	AE16	DQMH3	O	MASK signal
257	AF16	DQMH1	O	
258	AD15	DMAH14	O	Address bus (DIMM, SDRAM)
259	AE15	DMAH13	O	
260	AB14	VSS	-	Ground
261	AC14	VSS2	-	Ground
262	AD14	DMAH11	O	
263	AF15	DMAH12	O	
264	AE14	DMAH10	O	Address bus (DIMM, SDRAM)
265	AF14	DMAH9	O	
266	AF13	DMAH8	O	
267	AB13	VDDS	-	Power supply +3 V
268	AC13	VDDS	-	Power supply +3 V
269	AD13	DMAH6	O	
270	AE13	DMAH7	O	Address bus (DIMM, SDRAM)
271	AE12	DMAH4	O	
272	AD12	DMAH3	O	
273	AC12	VDDS	-	Power supply +1.5 V
274	AB12	VSS	-	Ground
275	AF12	DMAH5	O	
276	AF11	DMAH2	O	Address bus (DIMM, SDRAM)
277	AE11	DMAH1	O	
278	AD11	DMAH0	O	
279	AC11	VSS	-	Ground
280	AB11	VSS	-	Ground
281	AF10	DRAS1	O	
282	AE10	DCSH2	O	
283	AF9	DQMH2	O	MASK signal
284	AD10	DCSH3	O	
285	AC10	VDDC	-	Power supply +1.5 V
286	AB10	VSS2	-	Ground
287	AE9	DQMH0	O	MASK signal
288	AF8	DWEN1	O	
289	AD9	DCAS1	O	
290	AE8	DCLK2	O	
291	AC9	VDDS	-	Power supply +3 V
292	AB9	VDDC	-	Power supply +1.5 V
293	AD8	DCLK3	O	
294	AF7	MELO0	O	
295	AE7	MELO1	O	MEL wave data output
296	AD7	MELO2	O	
297	AC8	VDDS	-	
298	AB8	VSS	-	Ground
299	AF6	MELO3	O	
300	AE6	MELO4	O	
301	AF5	MELO5	O	MEL wave data output
302	AC7	MELO6	O	
303	AD6	MELO7	O	
304	AB7	WCLK0	O	For DAC LR clock
305	AC6	WCLK1	O	
306	AE5	EIRQ	O	
307	AF4	EICN	O	
308	AD5	ESDA	I/O	
309	AE4	ESCL	I/O	
310	AB6	MELI0	I	
311	AC5	MELI1	I	
312	AD4	MELI2	I	MEL wave data input
303	AF3	MELI3	I	
314	AE3	MELI4	I	
315	AF2	MELI5	I	

PIN NO.	OUTER NO.	NAME	I/O	FUNCTION
316	AB5	VSS2	-	Ground
317	AC4	VDDC	-	Power supply +1.5 V
318	AD3	MELI6	I	MEL wave data input
319	AE2	MELI7	I	
320	AF1	ADLR	O	Power supply +3 V
321	AB4	DITO	O	
322	AA5	VSS	-	Ground
323	AC3	AFRM	I/O	
324	AD2	ACLK	I/O	
325	AE1	ADIR	O	
326	AD1	ADAT0	I/O	Data bus (ABUS)
327	AA4	VDDS	-	Power supply +3 V
328	Y5	ADAT9	I/O	
329	AB3	ADAT3	I/O	
330	AC2	ADAT1	I/O	Data bus (ABUS)
331	AC1	ADAT2	I/O	
332	Y4	ADAT10	I/O	
333	AA3	ADAT6	I/O	
334	W5	VSS	-	Ground
335	W4	VDDS	-	Power supply +3 V
336	AB2	ADAT4	I/O	
337	AB1	ADAT5	I/O	
338	Y3	ADAT11	I/O	
339	AA2	ADAT7	I/O	
340	V5	ADAT14	I/O	Data bus (ABUS)
341	V4	ADAT15	I/O	
342	W3	ADAT13	I/O	
343	AA1	ADAT8	I/O	
344	Y2	ADAT12	I/O	
345	Y1	TDI	I	
346	U5	VSS2	-	Ground
347	U4	VDDC	-	Power supply +1.5 V
348	V3	HRD13	I/O	
349	W2	HRD15	I/O	
350	W1	HRD14	I/O	
351	V2	HRD12	I/O	
352	T5	HRD7	I/O	DRAM data bus
353	T4	HRD6	I/O	
354	U3	HRD10	I/O	
355	V1	HRD11	I/O	
356	U2	HRD9	I/O	
357	U1	HRD8	I/O	
358	R5	VSS	-	Ground
359	R4	VDDS	-	Power supply +3 V
360	T3	HRD5	I/O	
361	T2	HRD4	I/O	
362	T1	HRD3	I/O	DRAM data bus
363	R3	HRD2	I/O	
364	R2	HRD1	I/O	
365	P5	VDDS	-	Power supply +3 V
366	P4	HRD0	I/O	DRAM data bus
367	P3	RWEN	O	DRAM write enable
368	R1	RQML	O	
369	P2	RCAS	O	DRAM column address strobe (RAS signal)
370	P1	RRAS	O	DRAM row address strobe (RAS signal)
371	N1	RA13	O	DRAM address bus
372	N5	VDDS	-	Power supply +3 V
373	N4	VDDS	-	Power supply +3 V
374	N3	RA10	O	
375	N2	RA12	O	DRAM address bus
376	M2	RA1	O	
377	M3	RA2	O	
378	M4	VDDS	-	Power supply +3 V
379	M5	VSS	-	Ground
380	M1	RA0	O	
381	L1	RA3	O	DRAM address bus
382	L2	RA4	O	
383	L3	RA5	O	
384	L4	VSS2	-	Ground
385	L5	VSS	-	Ground
386	K1	RA6	O	
387	K2	RA7	O	DRAM address bus
388	J1	RA9	O	
389	K3	RA8	O	
390	K4	VDDC	-	Power supply +1.5 V
391	K5	VSS2	-	Ground
392	J2	RA11	O	DRAM address bus
393	H1	RCLK	O	
394	J3	RCLKE	O	
395	H2	RCLKIN	I	
396	J4	VDDS	-	Power supply +3 V
397	J5	VDDC	-	Power supply +1.5 V
398	H3	RQMH	O	
399	G1	LRD15	I/O	
400	G2	LRD14	I/O	DRAM data bus (Lower data)
401	G3	LRD13	I/O	
402	H4	VDDS	-	Power supply +3 V
403	H5	VSS	-	Ground
404	F1	LRD12	I/O	
405	F2	LRD11	I/O	DRAM data bus (Lower data)
406	E1	LRD8	I/O	
407	G4	VDDS	-	Ground
408	F3	LRD10	I/O	DRAM data bus (Lower data)
409	G5	VDDS	-	Ground
410	F4	LRD9	I/O	
411	E2	LRD7	I/O	
412	D1	LRD5	I/O	DRAM data bus (Lower data)
413	E3	LRD6	I/O	
414	D2	LRD4	I/O	
415	F5	VSS2	-	Ground
416	E4	VSS	-	Ground
417	D3	LRD3	I/O	
418	C1	LRD2	I/O	DRAM data bus (Lower data)
419	C2	LRD1	I/O	
420	B1	LRD0	I/O	

● TC160G22AF-1252 (XU135A00) MI2 (MPU Interface 2)

DM: IC71

PIN NO.	NAME	I/O	FUNCTION	PIN NO.	NAME	I/O	FUNCTION
1	TEST	I	Test pin	41	SD0	I/O	
2	VDD		Power supply	42	SD1	I/O	
3	XIN	I	Clock	43	SD2	I/O	
4	XOUT	O	Clock	44	SD3	I/O	
5	VSS		Ground	45	SD4	I/O	
6	/RESET	I	Reset	46	SD5	I/O	
7	/MCS	I	Main CPU chip select	47	SD6	I/O	
8	/MRD	I	Main CPU read	48	SD7	I/O	
9	/MWR	I	Main CPU write	49	SD8	I/O	Slave CPU data 0-15
10	/MIRQ	O	Main CPU interrupt request	50	SD9	I/O	
11	MA0	I	Main CPU address 0	51	SD10	I/O	
12	VSS		Ground	52	VSS		(Ground)
13	MA1	I	Main CPU data 0-15	53	SD11	I/O	
14	MA2	I	Main CPU address 1-4	54	SD12	I/O	
15	MA3	I		55	SD13	I/O	
16	MA4	I		56	SD14	I/O	
17	MD0	I/O		57	SD15	I/O	
18	MD1	I/O		58	/TXREQ	I	4-bit CPU send data request
19	MD2	I/O		59	RRDY	I	4-bit CPU ready
20	MD3	I/O		60	SCLK	O	4-bit CPU clock
21	VSS		(Ground)	61	SD	I/O	4-bit CPU data
22	MD4	I/O		62	DR1	O	KBS interface drive (pedal)
23	MD5	I/O		63	DR2	O	KBS interface drive (lower keyboard)
24	MD6	I/O		64	DR3	O	KBS interface drive (upper keyboard)
25	MD7	I/O		65	KD1	I	Keyboard data scan (pedal)
26	MD8	I/O		66	KD2	I	Keyboard data scan (lower keyboard)
27	MD9	I/O	Main CPU data 0-15	67	KD3	I	Keyboard data scan (upper keyboard)
28	MD10	I/O		68	KBSCLK	O	KBS clock
29	MD11	I/O		69	XCLK1	I	KSN interface clock
30	MD12	I/O		70	XCLK2	I	
31	MD13	I/O		71	XCLK3	I	
32	MD14	I/O		72	KSEL	I	KBS/KSN select
33	VDD		(Power supply)	73	VDD		Power supply
34	MD15	I/O		74	ADSEL0	O	FSV interface CH select
35	/SCS	I	Slave CPU chip select	75	ADSEL1	O	
36	/SRD	I	Slave CPU read	76	ADSEL2	O	
37	/SWR	I	Slave CPU write	77	ADMCLK	O	FSV A/D system clock (8 MHz)
38	/SIRQ	O	Slave CPU interrupt request	78	ADL/R	O	FSV A/D L/R clock(31.25 kHz)
39	SA0	I	Slave CPU address 0	79	ADSCLK	O	FSV A/D bit clock(1 MHz)
40	VSS		Ground	80	ADDATA	I	FSV A/D data

● AK4393-VF-E2 (XW029A00) D/A Converter

DM: IC45

PIN NO.	NAME	I/O	FUNCTION	PIN NO.	NAME	I/O	FUNCTION
1	DVSS	-	Digital Ground Pin	15	BVSS	I	Substrate Ground Pin, 0V
2	DVDD	-	Digital Power Supply Pin, 3.3V or 5.0V	16	VREFL	I	Low Level Voltage Reference Input Pin
3	MCLK	I	Master Clock Input Pin	17	VREFH	-	High Level Voltage Reference Input Pin
4	PD	I	Power-Down Mode Pin When at "L",the Ak4393 is in power-down mode and is held in reset. The AK4393 should always be reset upon power-up.	18	AVDD	-	Analog Power Supply Pin,5V
5	BICK	I	Audio Serial Data Clock Pin The clock of 64fs or more than is	19	AVSS	O	Analog Ground Pin, 0V
6	SDATA	I	recommended to be input on this pin. Audio Serial Data Input Pin 2's complement MSB-first data is input on this pin.	20	AOUTR-	O	Rch Negative analog output Pin
7	LRCK	I	L/R Clock Pin	21	AOUTR+	O	Rch Positive analog output Pin
8	SMUTE	I	Soft Mute Pin When this pin goes "H", soft mute cycle is initiated. When returning "L",the output mute releases.	22	AOUTL-	O	Lch Negative analog output Pin
	CS	I	Chip Select Pin in serial mode				
9	DFS	I	Doubla speed sampling mode Pin (Internal pull-down pin) L:Normal Speed, "H":Double Speed	23	AOUTL+	O	Lch Positive analog output Pin
10	DEM0	I	De-emphasis Enable pin	24	VCOM	O	Common Voltage Output Pin,2.6V
	CCLK	I	Control Data Clock Pin in serial mode				
11	DEM1	I	De-emphasis Enable pin	25	P/S	I	Parallel/Serial Select Pin(Internal pull-up pin)
	CDTI	I	Control Data Input Pin in serial mode				L:Serial control mode,"H": Parallel control mode
12	DIF0	I		26	CKS0	I	
13	DIF1	I	Digital Input Format Pin	27	CKS1	I	Master Clock Select Pin
14	DIF2	I		28	CKS2	I	

● HD63266F (XI939A00) FDC (Floppy Disk Controller)

DM: IC1

PIN NO.	NAME	I/O	FUNCTION	PIN NO.	NAME	I/O	FUNCTION
1	8"//5"	I	Data transmission speed	33	/TRKO	I	Track 00 signal
2	XTALSET	I	Clock select	34	/INDEX	I	Index signal
3	/RESET	I	Rest	35	/RDATA	I	Read data input from FDD
4	E//RD	I	Enable/Read	36	XTAL2		Clock
5	RW//WR	I	Read/write/Write	37	EXTAL2		
6	/CS	I	Chip select	38	NC		
7	/DACK	I	DMA acknowledge	39	XTAL1		Clock
8	RS0	I	Register select	40	EXTAL1		
9	RS1	I		41	VSS4		Ground
10	VSS1		Ground	42	VSS5		
11	VSS2			43	NC		
12	D0	I/O	Data bus	44	VCC2		
13	D1	I/O		45	VCC3		Power supply
14	D2	I/O		46	VCC4		
15	D3	I/O		47	/WGATE	O	Write control
16	D4	I/O		48	/WDATA	O	Writ data to FDD
17	D5	I/O		49	VSS6		Ground
18	D6	I/O		50	/STEP	O	Step signal to control head of FDD
19	D7	I/O		51	/HDIR	O	Direction
20	/DREQ	O	DMA request	52	/HLOAD	O	Head load
21	/IRQ	O	Interrupt request	53	/HSEL	O	Head select
22	/DEND	I	Data end	54	VSS7		Ground
23	VSS3		Ground	55	/DS0	O	Drive select
24	1/2 EX1			56	/DS1	O	
25	VCC1		Power supply	57	/DS2	O	
26	NUM1	I		58	/DS3	O	
27	NUM3	I		59	VSS8		Ground
28	IFS	I	Host interface select	60	/MON0	O	Motor on
29	SFORM	I	Format data	61	/MON1	O	
30	/INP	I	Index pulse	62	/MON2	O	
31	/READY	I	Ready from FDD	63	/MON3	O	
32	/WPRT	I	Write control signal	64	VSS9		Ground

● UPD780031AYGK-NO1-9ET (XZ916100) LED DRIVER/SWITCH SCAN

PNR: IC1, PNL: IC1

PIN NO.	NAME	I/O	FUNCTION	PIN NO.	NAME	I/O	FUNCTION
1	P50/A8	I/O	Port 5 / Higher address bus	33	P10/ANI0	I	Port 1 / A/D converter analog input
2	P51/A9	I/O	Port 5 / Higher address bus	34	AVREF	I	A/D converter reference voltage input
3	P51/A10	I/O	Port 5 / Higher address bus	35	AVDD		Analog power supply
4	P53/A11	I/O	Port 5 / Higher address bus	36	RESET	I	System reset input
5	P54/A12	I/O	Port 5 / Higher address bus	37	XT2		Subsystem clock oscillation
6	P55/A13	I/O	Port 5 / Higher address bus	38	XT1	I	Subsystem clock oscillation
7	P56/A14	I/O	Port 5 / Higher address bus	39	IC		Internally connected
8	P57/A15	I/O	Port 5 / Higher address bus	40	X2		Main system clock oscillation
9	Vss0		Ground	41	X1	I	Main system clock oscillation
10	VDD0		Power supply	42	Vss1		Ground
11	P30	I/O	Port 3	43	P00/INTP0	I/O	Port 0 / External interrupt request input
12	P31	I/O	Port 3	44	P01/INTP1	I/O	Port 0 / External interrupt request input
13	P32/SDA0	I/O	Port 3 / Serial data input/output	45	P02/INTP2	I/O	Port 0 / External interrupt request input
14	P33/SCL0	I/O	Port 3 / Serial clock input/output	46	P03/INTP3/ADTRG	I/O	Port 0 / External interrupt request input / Trigger signai input
15	P34	I/O	Port 3	47	P70/TI00/TO0	I/O	Port 7 / External count clock input / 16-bit timer/event counter 0 output
16	P35	I/O	Port 3	48	P71/TI01	I/O	Port 7 / Capture trigger input
17	P36	I/O	Port 3	49	P72/TI50/TO50	I/O	Port 7 / External count clock input / 8-bit timer/event counter 50 output
18	P20/SI30	I/O	Port 2 / Serial data input	50	P73/TI51/TO51	I/O	Port 7 / External count clock input / 8-bit timer/event counter 51 output
19	P21/SO30	I/O	Port 2 / Serial data output	51	P74/PCL	I/O	Port 7 / Clock output
20	P22/SCK30	I/O	Port 2 / Serial clock input/output	52	P75/BUZ	I/O	Port 7 / Buzzer output
21	P23RxD0	I/O	Port 2 / Serial data input	53	P64/RD	I/O	Port 6 / Strobe signal output for reading
22	P24/TxD0	I/O	Port 2 / Serial data output	54	P65/WR	I/O	Port 6 / Strobe signal output for writing
23	P25/ASCK0	I/O	Port 2 / Serial clock input/output	55	P66/WAIT	I/O	Port 6 / Wait insertion
24	VDD1		Power supply	56	P67/ASTB	I/O	Port 6 / Strobe output
25	AVss		Ground	57	P40/AD0	I/O	Port 4 / Lower address/data bus
26	P17/ANI7	I	Port 1 / A/D converter analog input	58	P41/AD1	I/O	Port 4 / Lower address/data bus
27	P16/ANI6	I	Port 1 / A/D converter analog input	59	P42/AD2	I/O	Port 4 / Lower address/data bus
28	P15/ANI5	I	Port 1 / A/D converter analog input	60	P43/AD3	I/O	Port 4 / Lower address/data bus
29	P14/ANI4	I	Port 1 / A/D converter analog input	61	P44/AD4	I/O	Port 4 / Lower address/data bus
30	P13/ANI3	I	Port 1 / A/D converter analog input	62	P45/AD5	I/O	Port 4 / Lower address/data bus
31	P12/ANI2	I	Port 1 / A/D converter analog input	63	P46/AD6	I/O	Port 4 / Lower address/data bus
32	P11/ANI1	I	Port 1 / A/D converter analog input	64	A47/AD7	I/O	Port 4 / Lower address/data bus

● S1D13506F00A (XZ690A00) COLOR LCD / CRT / TV Controller

DM: IC72

PIN NO.	NAME	I/O	FUNCTION	PIN NO.	NAME	I/O	FUNCTION
1	AB2	I	Address bus input (A [12:1])	65	MA2	O	Maltiplex memory address bus
2	AB1	I	Address bus input (A [12:1])	66	MA4	O	Maltiplex memory address bus
3	AB0	I	SH-3 bus Interface	67	MA3	O	Maltiplex memory address bus
4	CS#	I	Decode	68	VSS		VSS
5	M/R#	I/O	Registor Setting	69	CLKI	I	Selectable Input clock
6	BS#	I	Bus Start Signal Input	70	TESTEN	I	Test enable interface
7	RD#	I	Read Signal Input	71	CLKI2	I	Selectable Input clock
8	WE0#	I	Wright Enable input	72	VDD		VDD
9	WE1#	I/O	Wright Enable input	73	FPFRAME	O	Frame pulse
10	RD/WR#	I	Read / Wright Signal Input	74	FPLINE	O	Line pulse
11	RESET#	I	Reset	75	NC		
12	VDD		VDD	76	DRDY	O	MOD output
13	BUSCLK	I	System Bus Clock	77	FPSHIFT	O	Shift clock
14	VSS		VSS	78	VSS		VSS
15	WAIT#	O	Wait Output	79	FPDAT0	O	LCD panel data bus
16	DB15	I/O	System Data Bus	80	FPDAT1	O	LCD panel data bus
17	DB14	I/O	System Data Bus	81	FPDAT2	O	LCD panel data bus
18	DB13	I/O	System Data Bus	82	FPDAT3	O	LCD panel data bus
19	DB12	I/O	System Data Bus	83	FPDAT4	O	LCD panel data bus
20	DB11	I/O	System Data Bus	84	FPDAT5	O	LCD panel data bus
21	DB10	I/O	System Data Bus	85	FPDAT6	O	LCD panel data bus
22	DB9	I/O	System Data Bus	86	FPDAT7	O	LCD panel data bus
23	DB8	I/O	System Data Bus	87	VSS		VSS
24	DB7	I/O	System Data Bus	88	FPDAT8	O	LCD panel data bus
25	DB6	I/O	System Data Bus	89	FPDAT9	O	LCD panel data bus
26	DB5	I/O	System Data Bus	90	FPDAT10	O	LCD panel data bus
27	DB4	I/O	System Data Bus	91	FPDAT11	O	LCD panel data bus
28	DB3	I/O	System Data Bus	92	FPDAT12	O	LCD panel data bus
29	DB2	I/O	System Data Bus	93	FPDAT13	O	LCD panel data bus
30	DB1	I/O	System Data Bus	94	FPDAT14	I/O	LCD panel data bus
31	DB0	I/O	System Data Bus	95	FPDAT15	I/O	LCD panel data bus
32	VSS		VSS	96	VSS		VSS
33	VDD		VDD	97	VDD		VDD
34	MD15	I/O	Memory data I/O bus	98	DACVSS		DACVSS
35	MD0	I/O	Memory data I/O bus	99	DACVDD		DACVDD
36	MD14	I/O	Memory data I/O bus	100	RED	O	CRT output: RED
37	MD1	I/O	Memory data I/O bus	101	IREF	I	DAC current
38	MD13	I/O	Memory data I/O bus	102	DACVDD		DACVDD
39	MD2	I/O	Memory data I/O bus	103	GREEN	O	CRT output: GREEN
40	MD12	I/O	Memory data I/O bus	104	DACVDD		DACVDD
41	MD3	I/O	Memory data I/O bus	105	BLUE	O	CRT output: BLUE
42	MD11	I/O	Memory data I/O bus	106	DACVSS		DACVSS
43	MD4	I/O	Memory data I/O bus	107	HRTC	O	Horizontal trace signal
44	MD10	I/O	Memory data I/O bus	108	VRTC	O	Vertical trace signal
45	MD5	I/O	Memory data I/O bus	109	VDD		VDD
46	MD9	I/O	Memory data I/O bus	110	VSS		VSS
47	MD6	I/O	Memory data I/O bus	111	AB20	I	Address bus input (A20)
48	MD8	I/O	Memory data I/O bus	112	AB19	I	Address bus input (A19)
49	MD7	I/O	Memory data I/O bus	113	AB18	I	Address bus input (A18)
50	VSS		VSS	114	AB17	I	Address bus input (A17)
51	LCAS#	O	LCAS# output	115	AB16	I	Address bus input (A [16:13])
52	UCAS#	O	UCAS# output	116	AB15	I	Address bus input (A [16:13])
53	WE#	O	WE# output	117	AB14	I	Address bus input (A [16:13])
54	RAS#	O	RAS# output	118	AB13	I	Address bus input (A [16:13])
55	VDD		VDD	119	AB12	I	Address bus input (A [12:1])
56	MA9	I/O	GPIO3	120	AB11	I	Address bus input (A [12:1])
57	MA11	I/O	GPIO2	121	AB10	I	Address bus input (A [12:1])
58	MA8	O	Maltiplex memory address bus	122	AB9	I	Address bus input (A [12:1])
59	MA10	I/O	GPIO1	123	AB8	I	Address bus input (A [12:1])
60	MA7	O	Maltiplex memory address bus	124	AB7	I	Address bus input (A [12:1])
61	MA0	O	Maltiplex memory address bus	125	AB6	I	Address bus input (A [12:1])
62	MA6	O	Maltiplex memory address bus	126	AB5	I	Address bus input (A [12:1])
63	MA1	O	Maltiplex memory address bus	127	AB4	I	Address bus input (A [12:1])
64	MA5	O	Maltiplex memory address bus	128	AB3	I	Address bus input (A [12:1])

■ IC BLOCK DIAGRAM (Tyrps)

● **TC74HC245AF**(XS720A00)
TC74VHCT245AFT (XT744A00)
HD74LVC245A(XW148A00)
TRANSCEIVER

DM: IC025, IC026, IC027, IC028, IC029, IC036, IC073, IC074, IC075, IC076, IC077

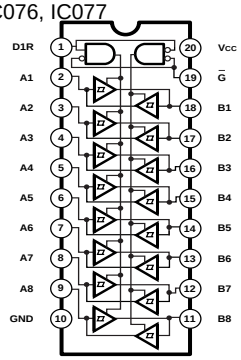

● **HD74LVC138FP** (XS963A00)
SN74LVC138ANSR(X3510A00)
3 to 8 Demultiplexer

DM: IC010

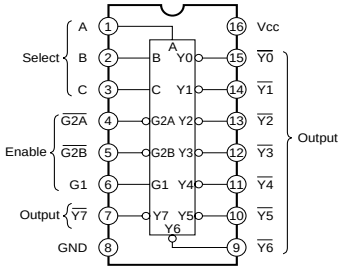

● **TC74VHC157F(EL)**(XT475A00)
MULTIPLEXER

DM: IC037

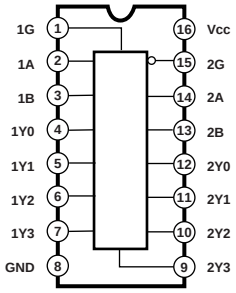

● **TC74VHC04F EL** (XM332A00)
TC74HCU04AFEL (XD598A00)
Hex Inverter

DM: IC081, IC033

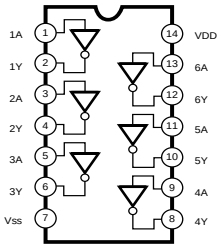

● **TC74VHC14FT** (XV890A00)
Hex Inverter

DM: IC014

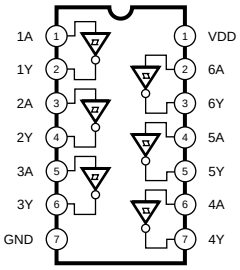

● **TC74VHC74F-EL** (XW875A00)
Dual D-Type Flip-Flop

DM: IC035

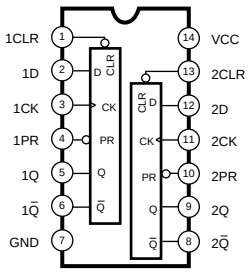

INPUTS				OUTPUTS	
PR	CLR	CLK	D	Q	Q
L	H	X	X	H	L
H	L	X	X	L	H
L	L	X	X	H	H
H	H	f	H	H	L
H	H	f	L	L	H
H	H	L	X	Q ₀	Q ₀

● **HD74LS09FPEL** (XP642A00)
TC74VHC08FT (XV891A00)
Quad 2 Input AND

DM: IC080, IC082, IC091

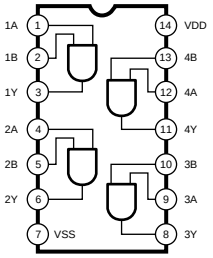

● **TC74VHC11F(EL)** (XT812A00)
Triple 3 Input AND

DM: IC030

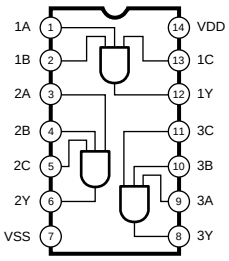

● **TC74VHC32FT** (XY945A00)
TC74VHC32FT (XZ372A00)
Quad 2 Input OR

DM: IC018, IC034

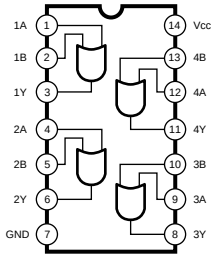

● **M51132L/FP** (XE470A00)
VCA

AJACK: IC007

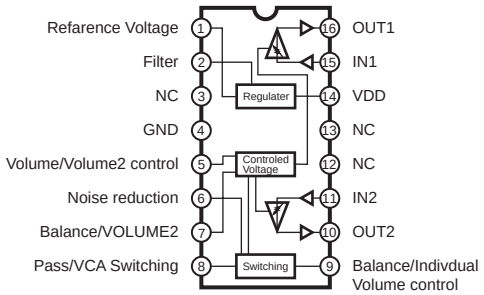

● **SN74AHCT1G08DCKR** (X0158A00)
Single 2-Input Positive-AND Gate

DM: IC002, IC006

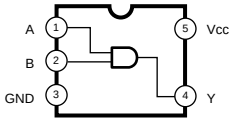

FUNCTION TABLE

INPUTS		OUTPUT
A	B	Y
H	H	H
L	X	L
X	L	L

● **LA6517M-TE-R** (XT131A00)
NJM2100D (XZ435A00)
Dual Low Voltage Power Amplifier

AJACK: IC004
PC: IC001

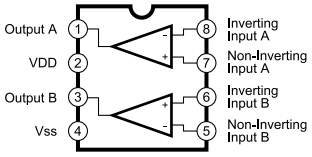

● **μPC4570G2** (XF291A00)
Dual Operational Amplifier

DM: IC044, IC047, IC049, IC050, IC053, IC056, IC058
AJACK: IC001, IC002, IC003, IC005, IC006

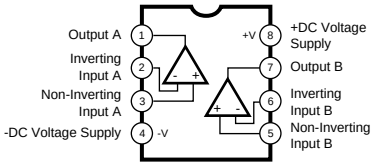

■ IC BLOCK DIAGRAM (TRS-MS01)

● **KIA7812AP** (XN324A00)
Dual Operational Amplifier

MAIN: IC1, IC2, IC7

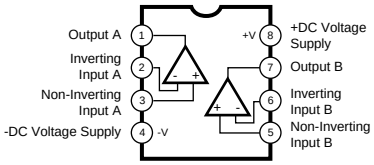

■ CIRCUIT BOARDS (Tyros)

CONTENTS

- DJACK Circuit Board (X2510C0) 39
- DM Circuit Board (X2584D0) 40
- PNL Circuit Board (X2501E0) 44
- PNR Circuit Board (X2500E0) 48
- PNC Circuit Board (X2502C0) 52
- AJACK Circuit Board (X2509D0) 54
- LCR Circuit Board (X2503D0) 56
- LCL Circuit Board (X2503D0) 57
- EN Circuit Board (X2500E0) 57
- INLET Circuit Board (X2621C0) 58
- PC Circuit Board (X2612B0) 58
- EMKS-N Circuit Board (X2610C0) 59
- REG Circuit Board (X3184A0) 59
- SPOUTR Circuit Board (X2612C0) 60
- SPOUTL Circuit Board (X2612C0) 60
- PHONES Circuit Board (X2612C0) 60
- MICVR Circuit Board (X2501E0) 61
- MICVRSUB Circuit Board (X2612C0) 61

■ CIRCUIT BOARDS (TRS-MS01)

CONTENTS

- MAIN (A) 62
- MAIN (B) 64
- MAIN (C) 64
- MAIN (S) 64

● **DJACK Circuit Board**

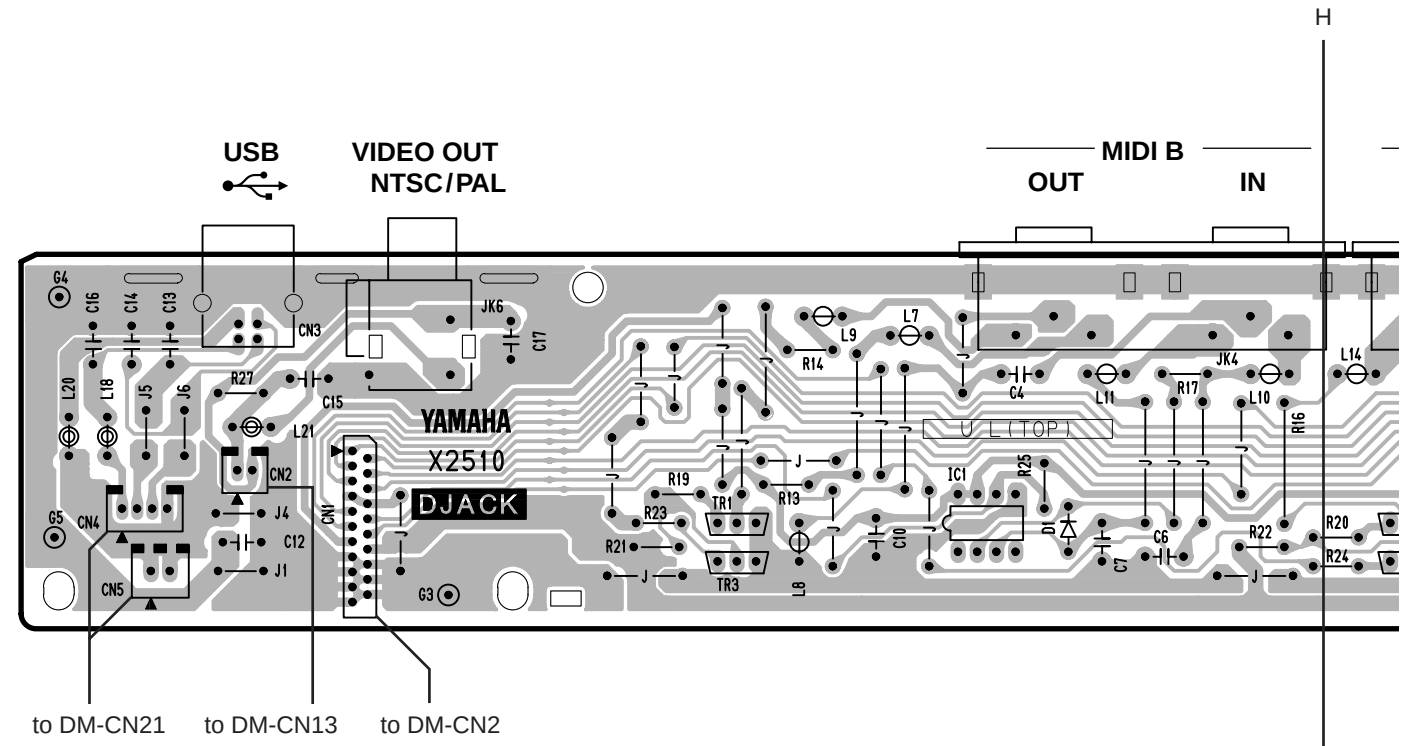

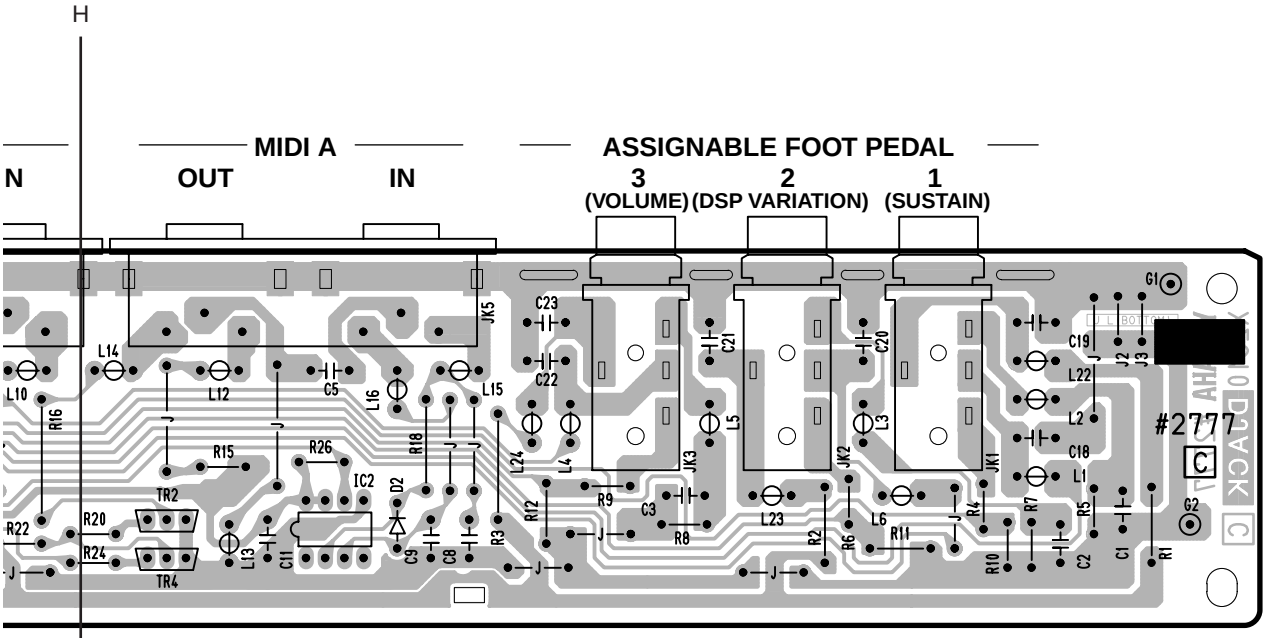

Component Side

2NA-V881320 2

Note: See parts list for details of circuit board component parts.

- **DM Circuit Board**

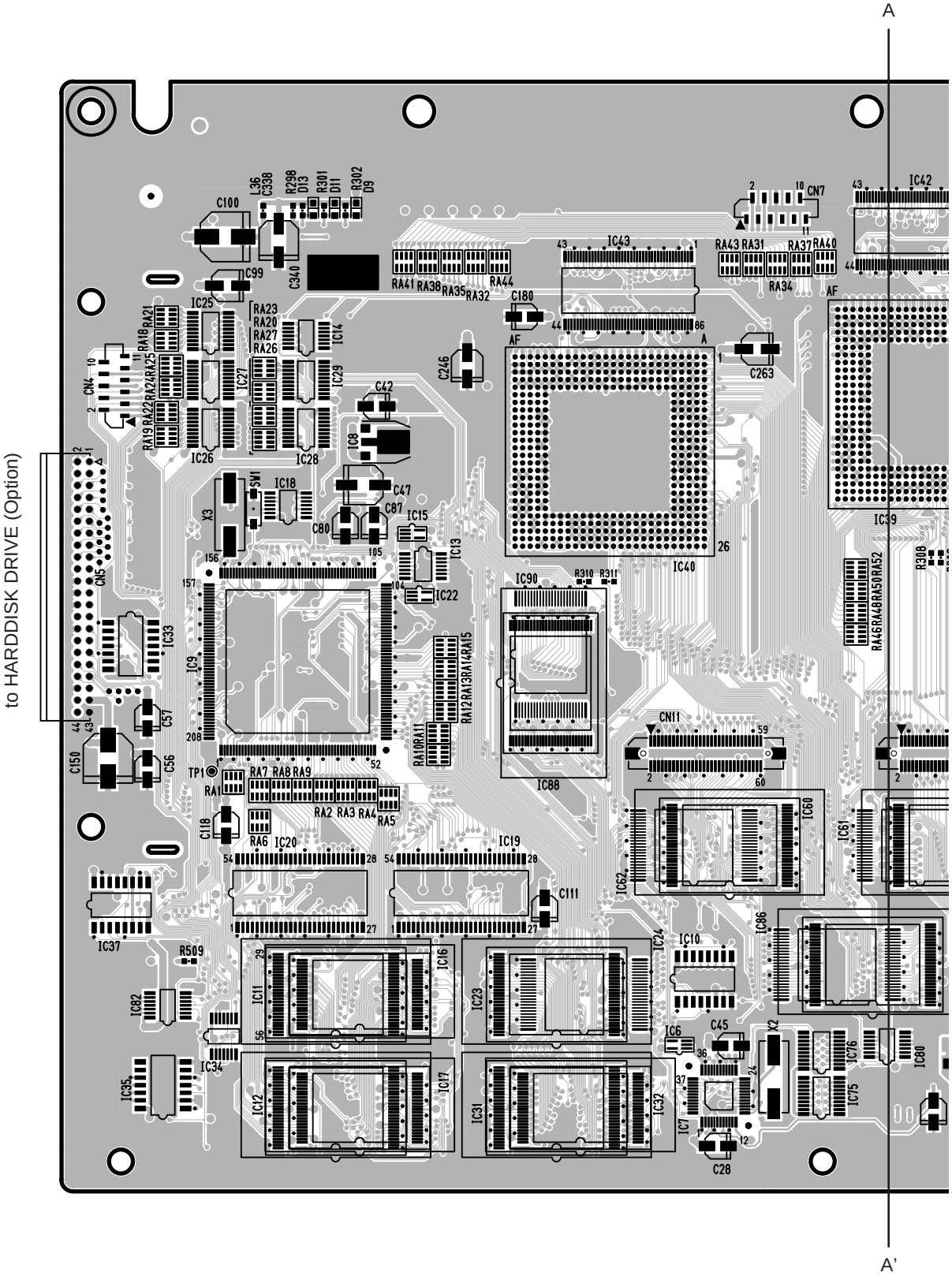

Component Side

2NA-V892380

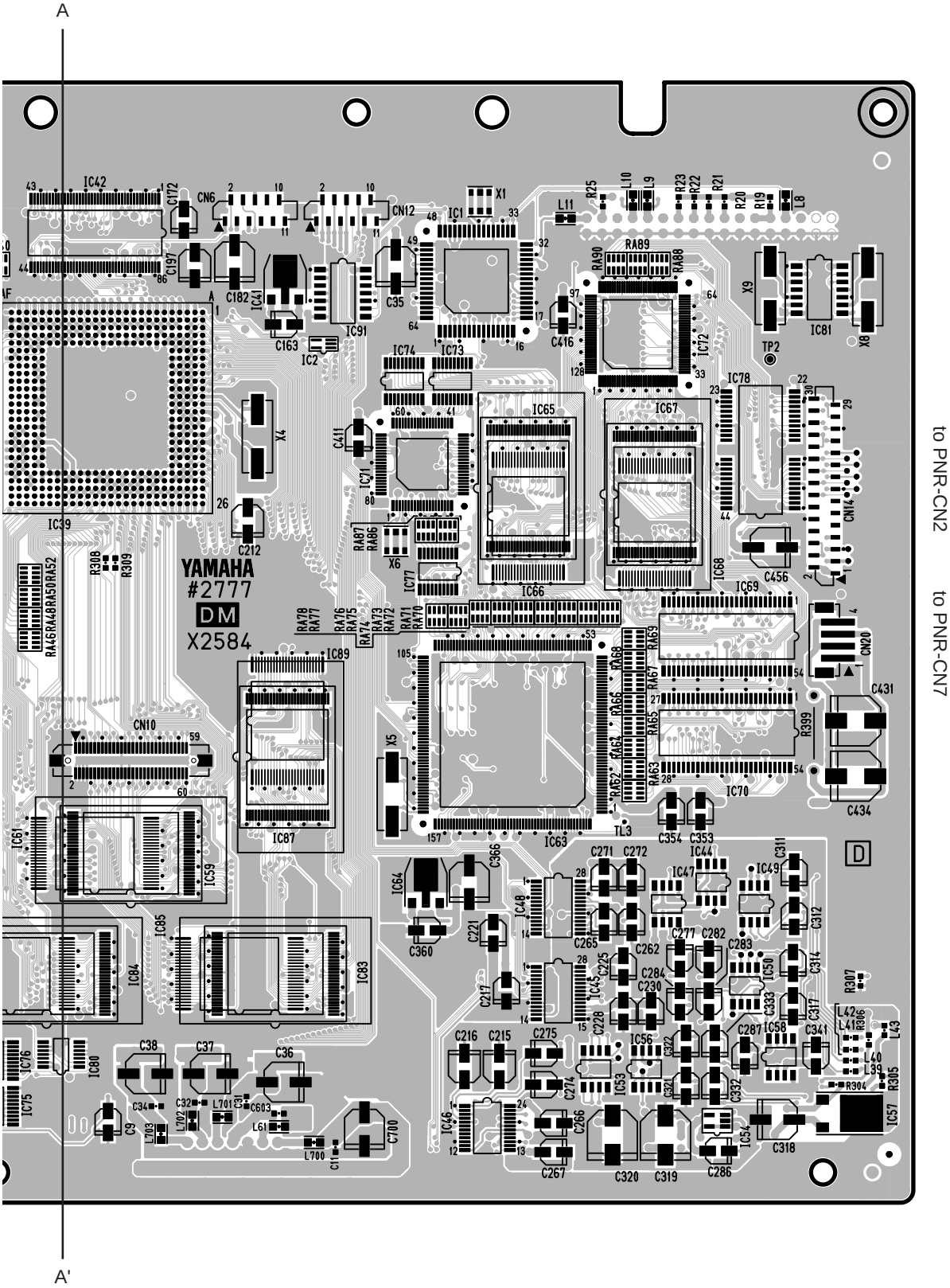

Component Side

Note: See parts list for details of circuit board component parts.

- **DM Circuit Board**

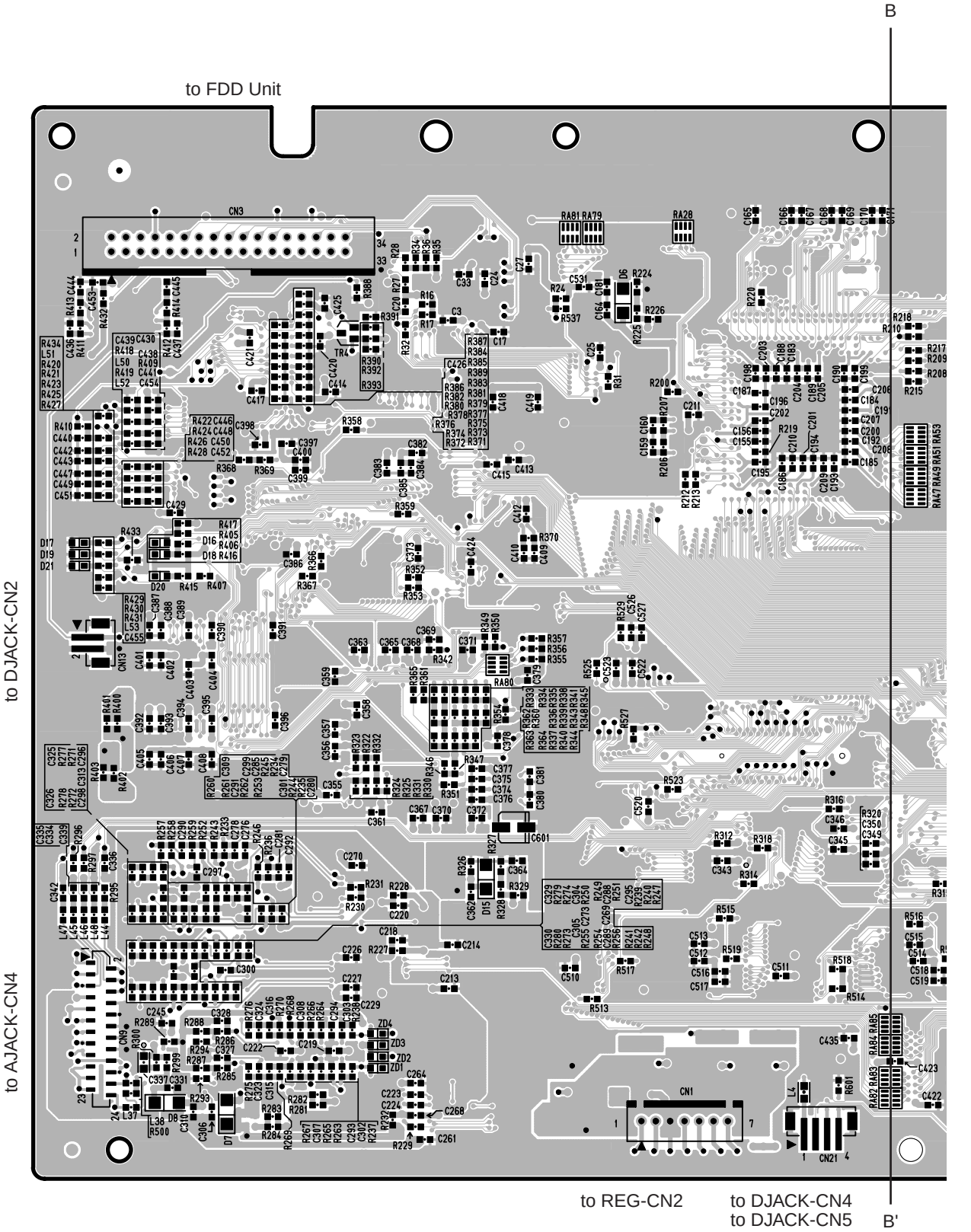

Pattern Side

2NA-V892380

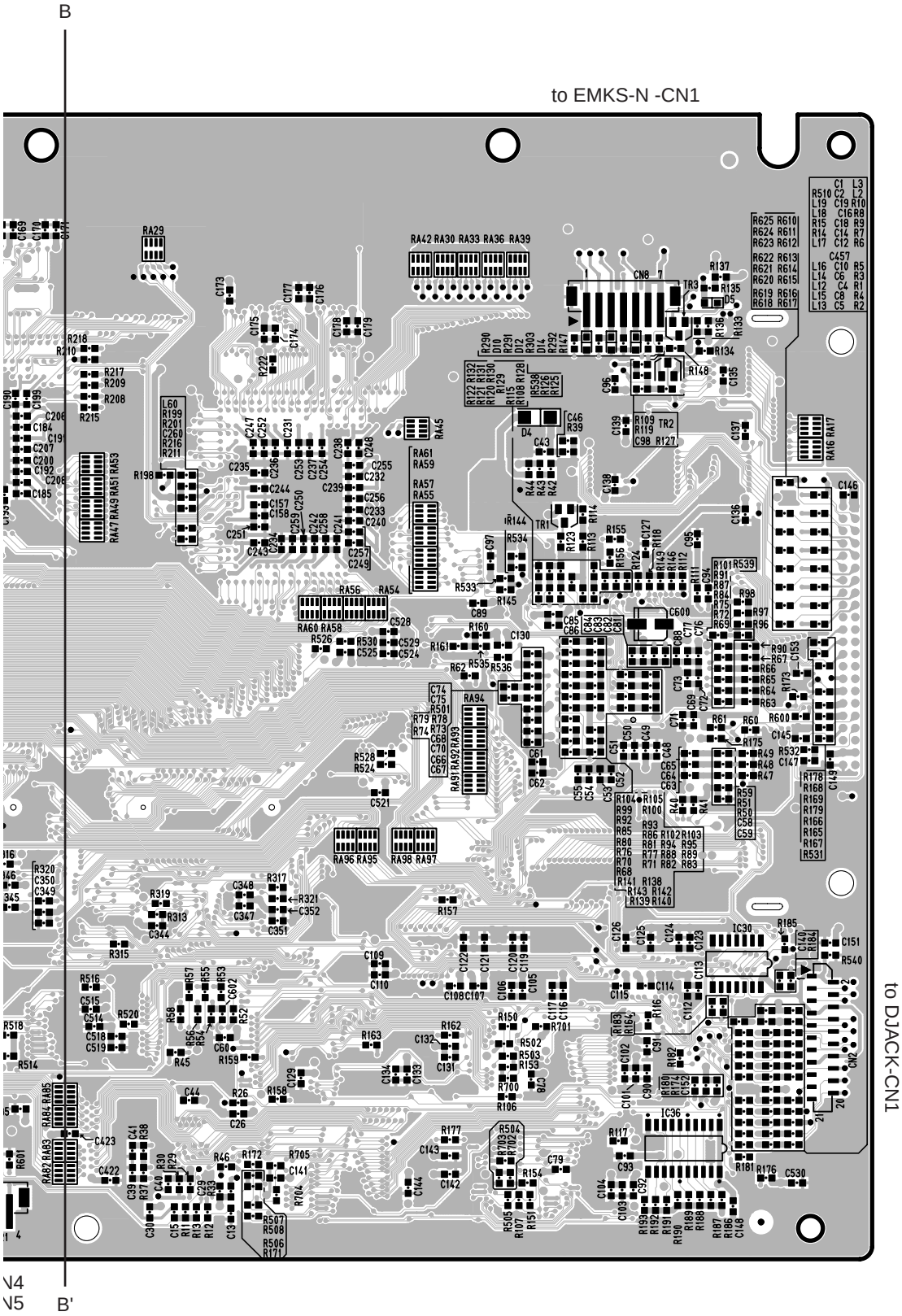

Pattern Side

Note: See parts list for details of circuit board component parts.

● **PNL Circuit Board**

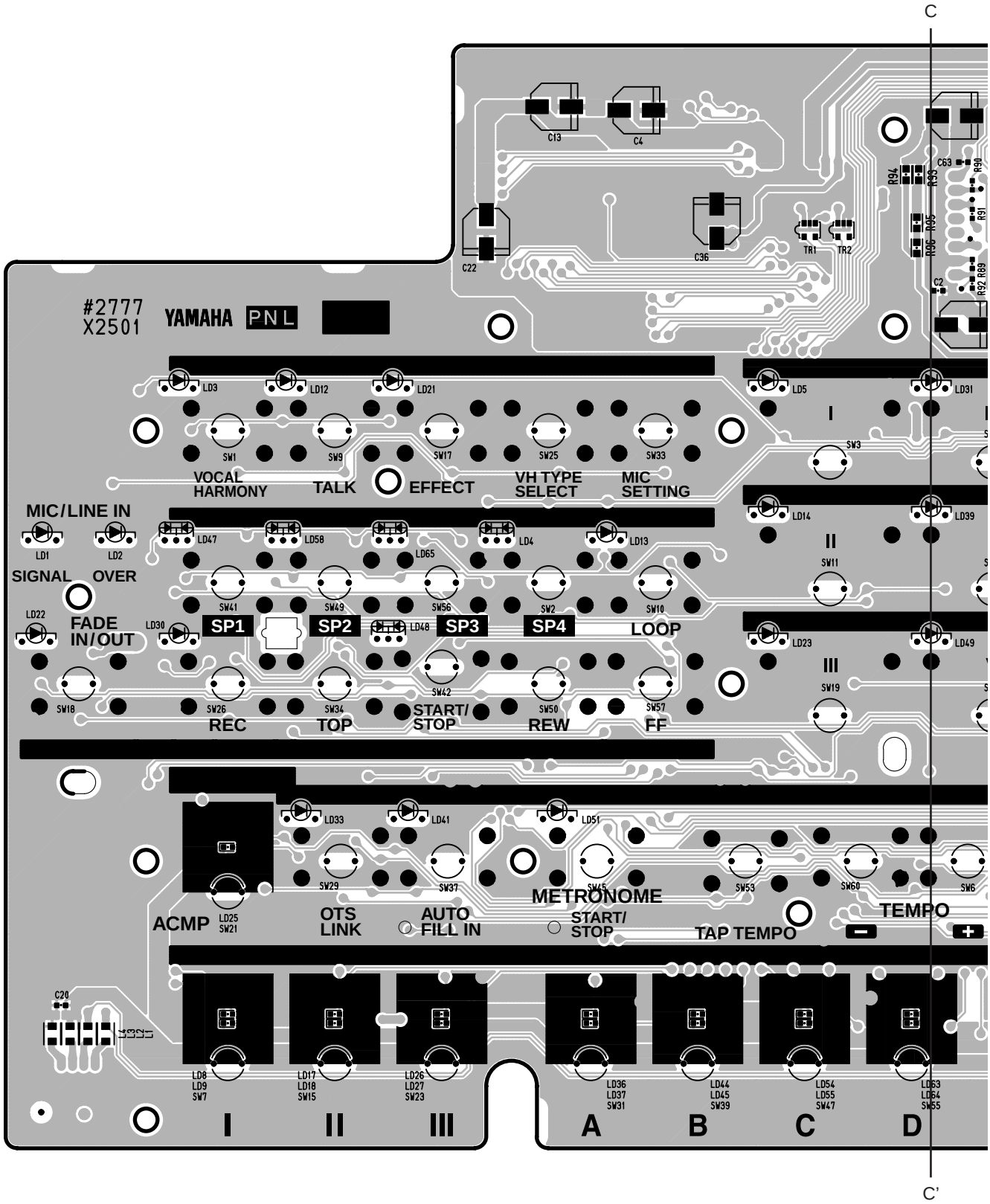

Component Side

2NA-V881090 1

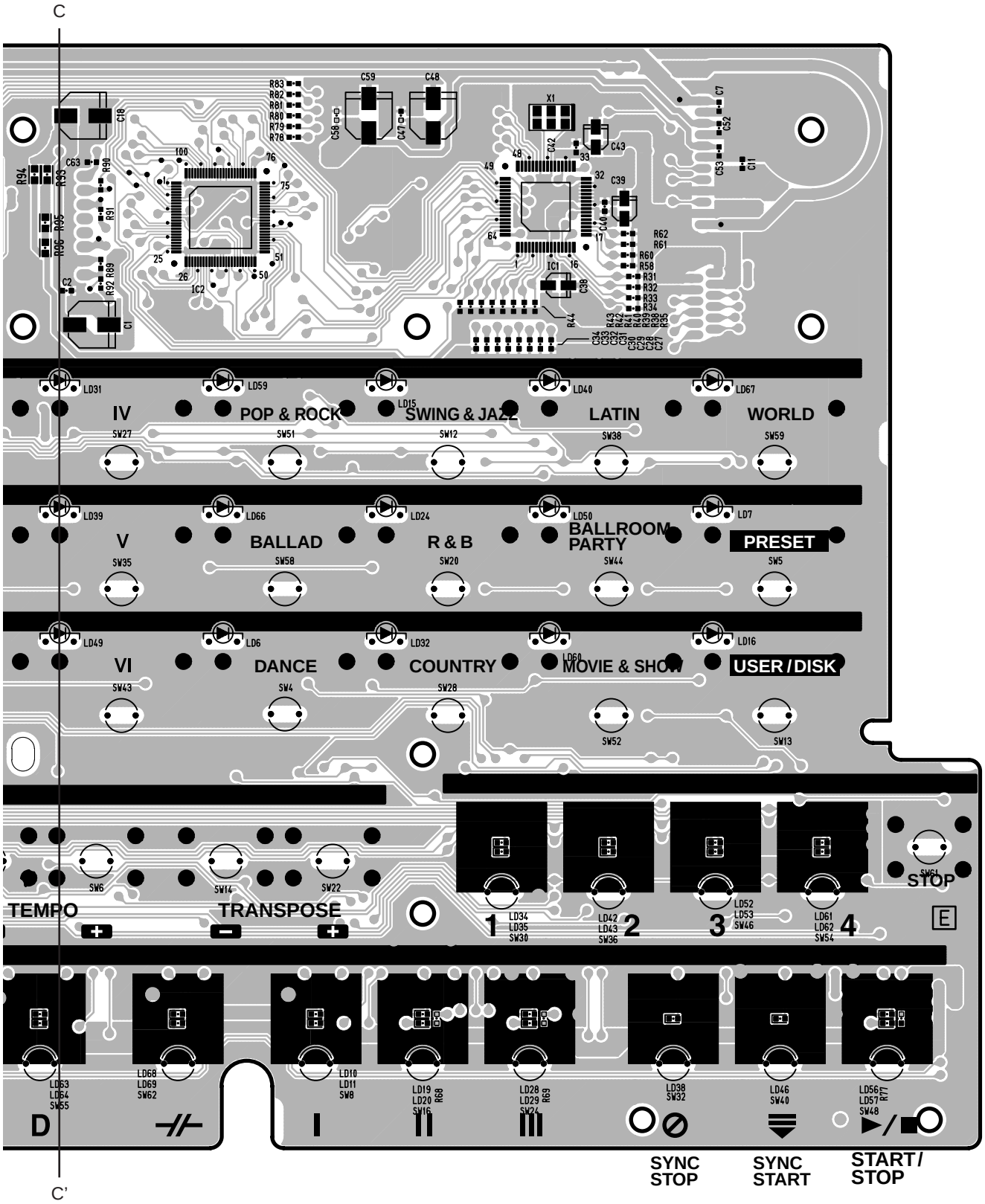

Component Side

Note: See parts list for details of circuit board component parts.

- **PNL Circuit Board**

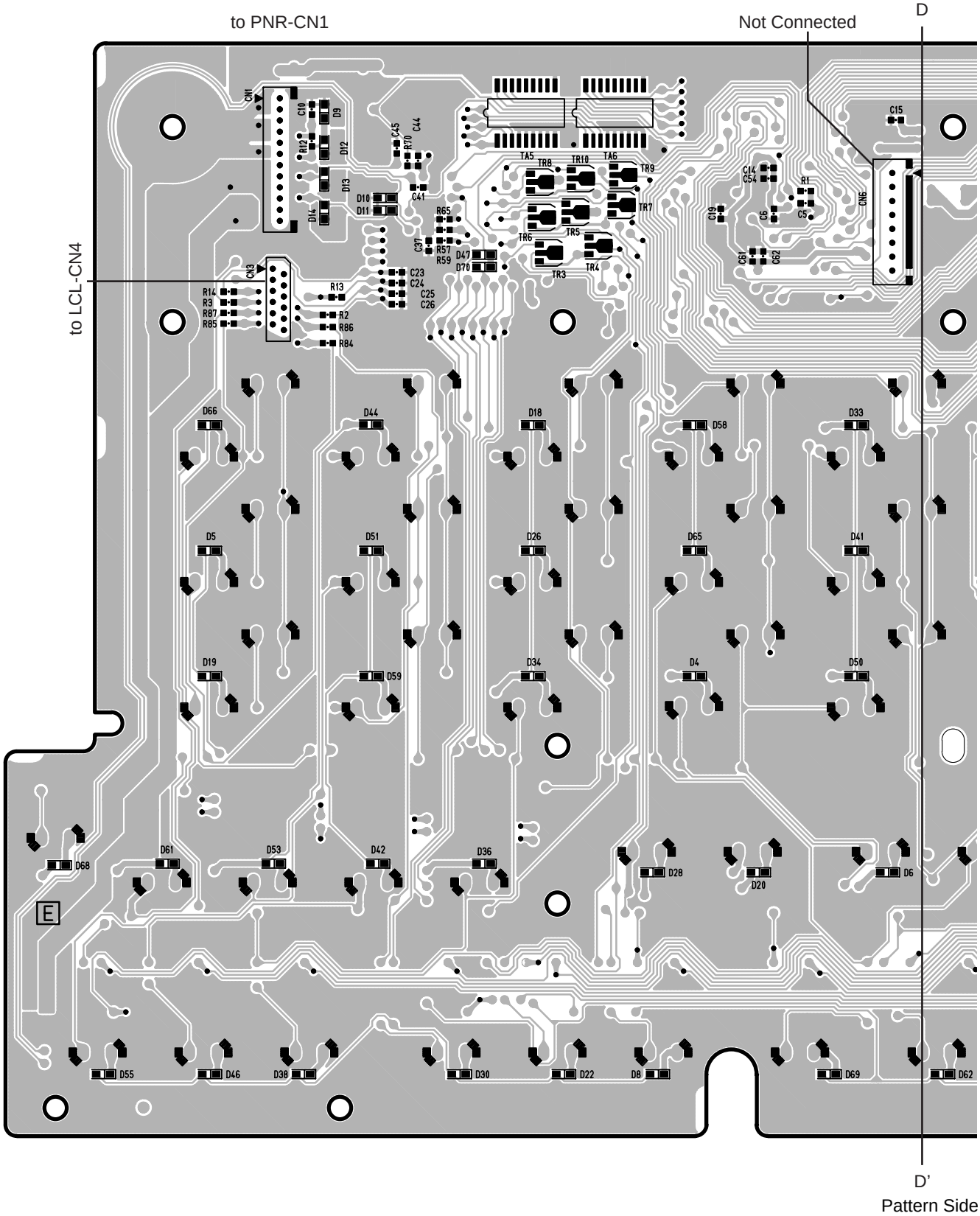

2NA-V881090 1

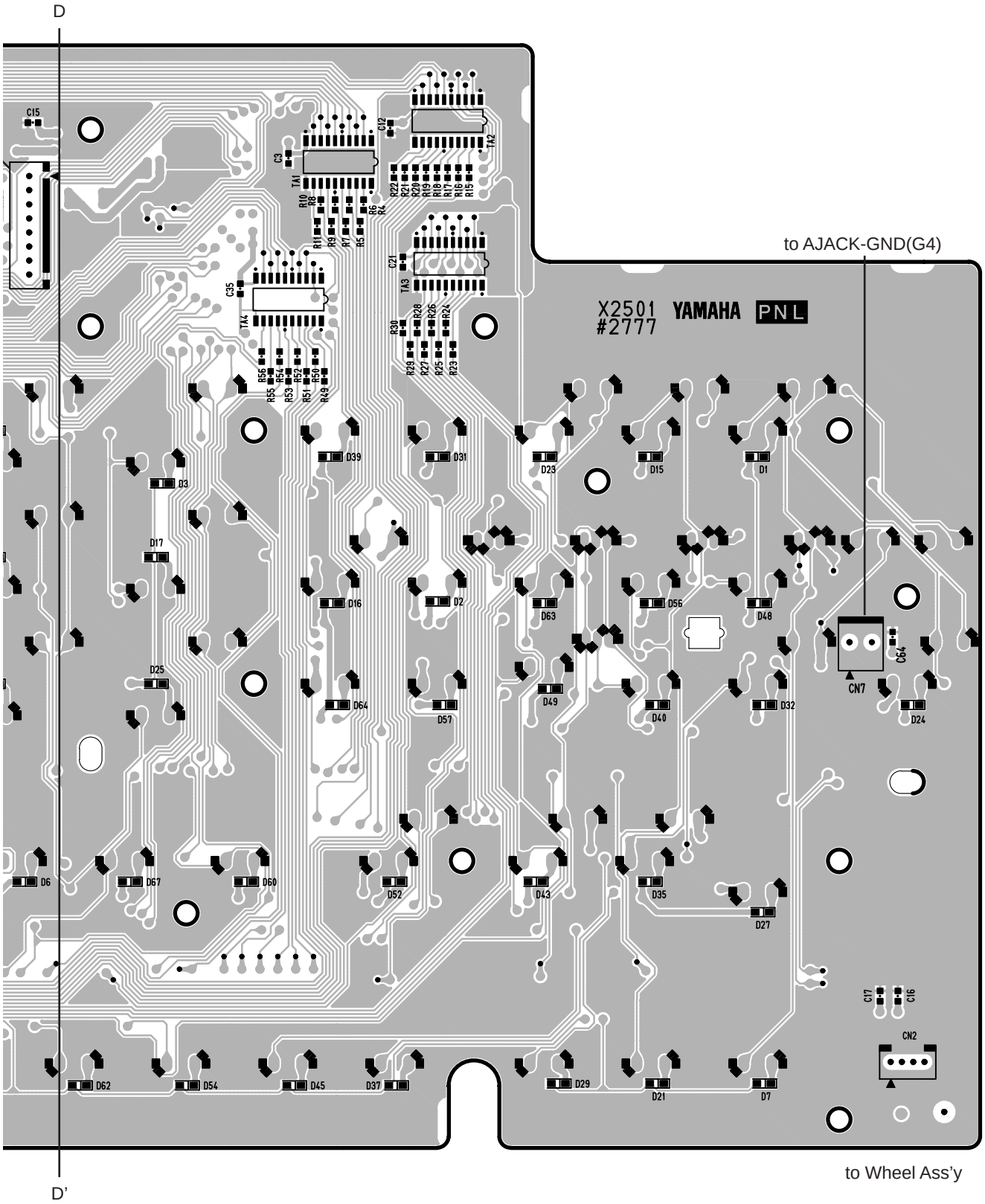

Pattern Side

Note: See parts list for details of circuit board component parts.

● **PNR Circuit Board**

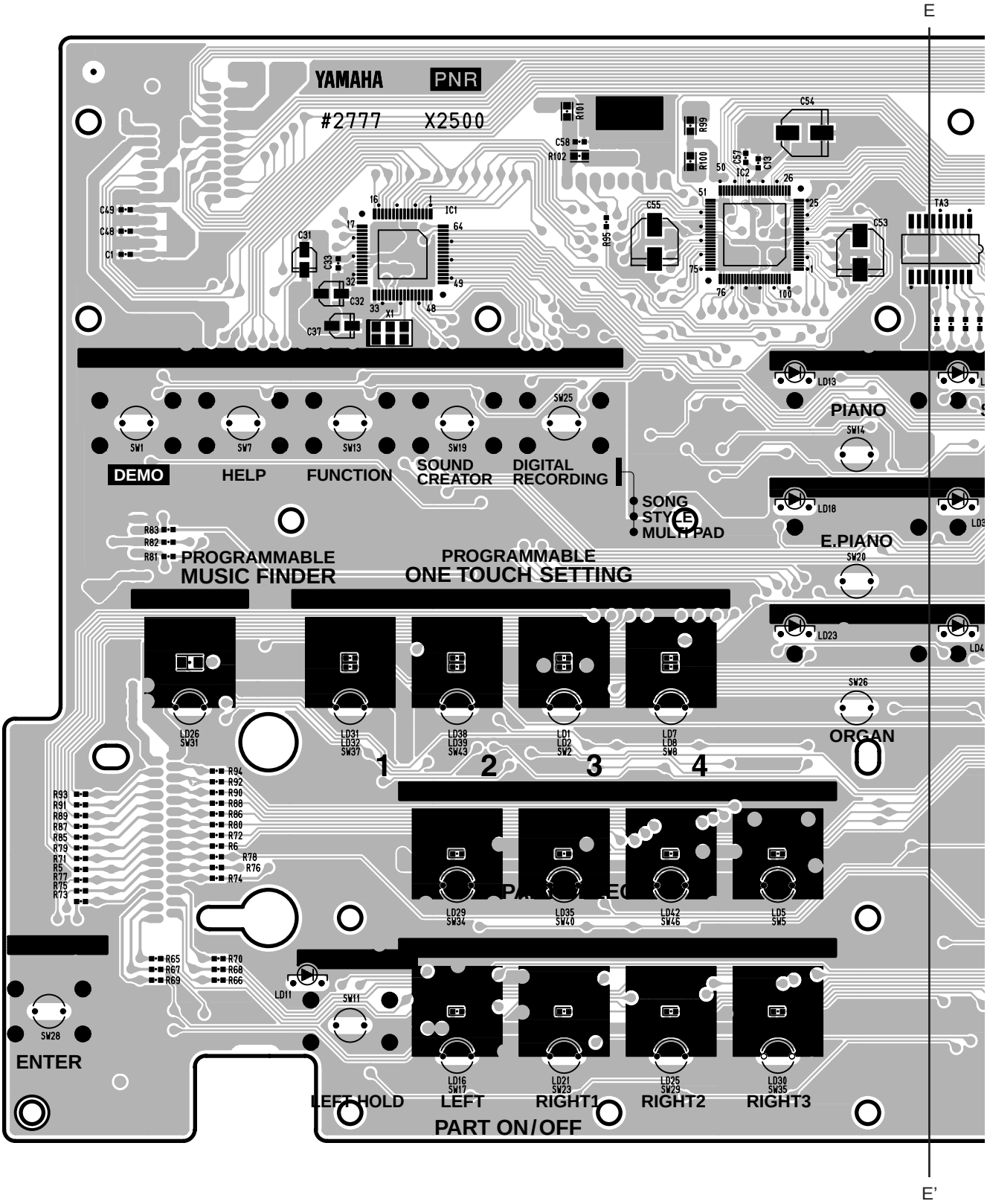

Component Side

2NA-V881080 1

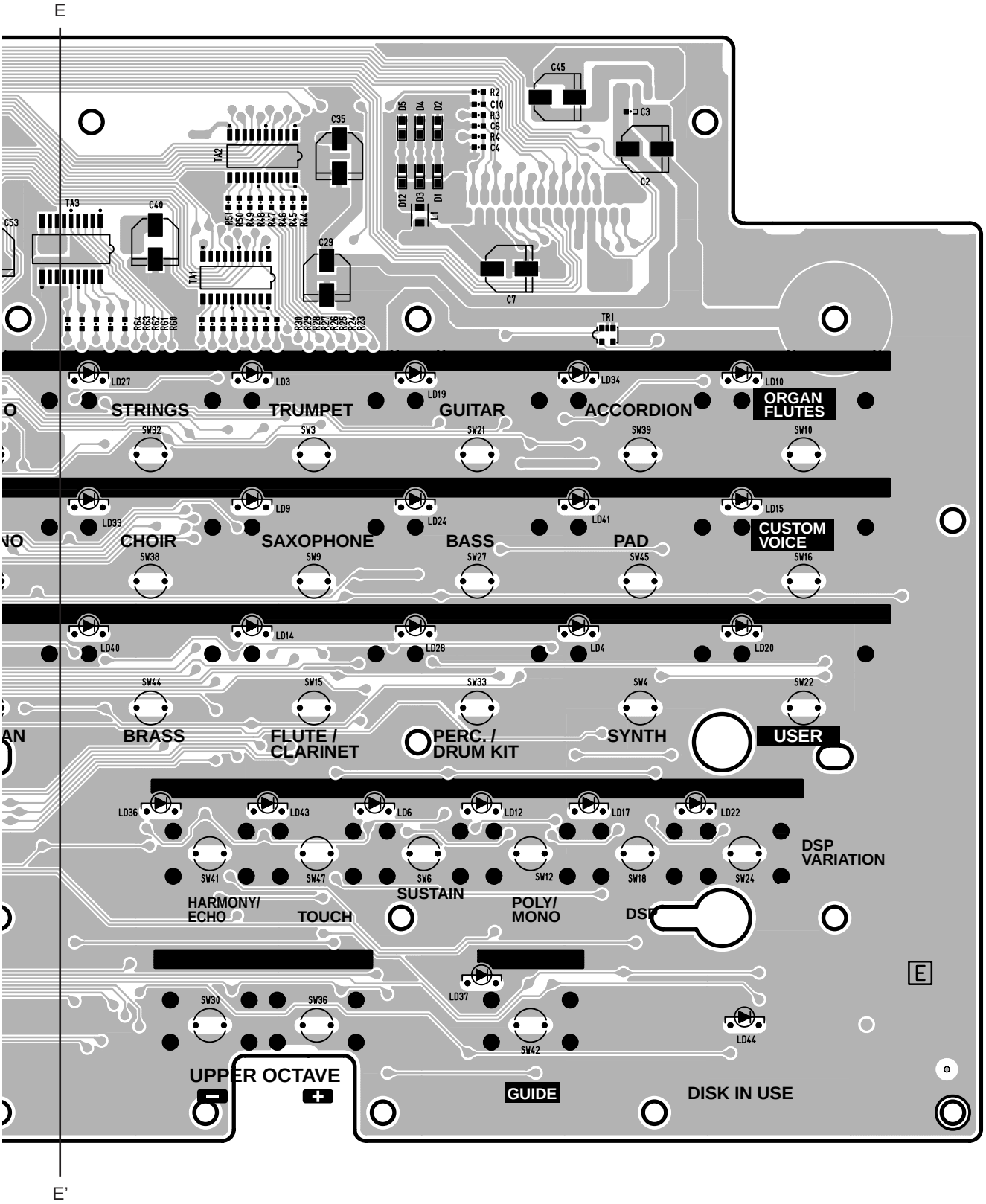

Component Side

Note: See parts list for details of circuit board component parts.

- **PNR Circuit Board**

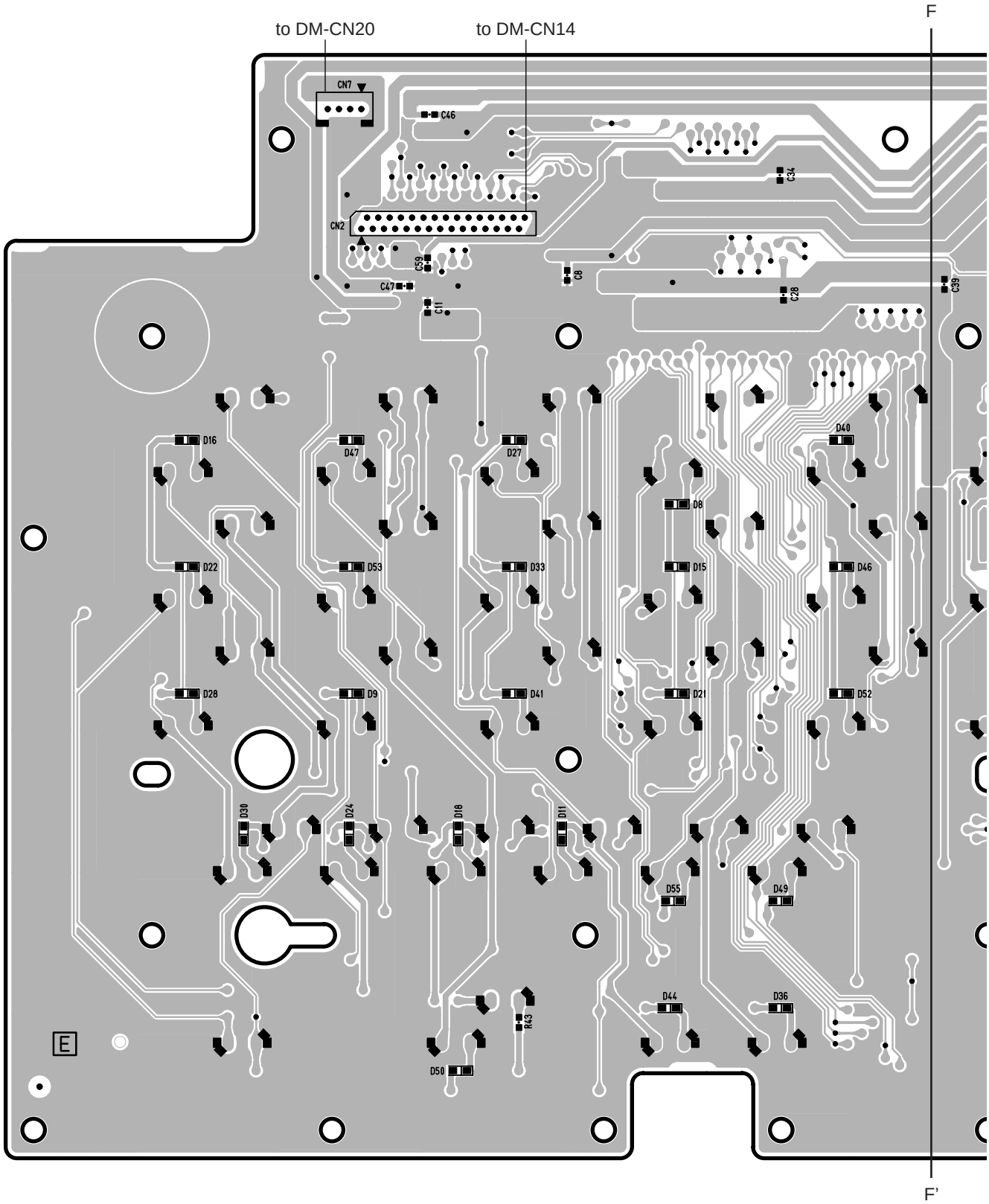

Pattern Side

2NA-V881080 1

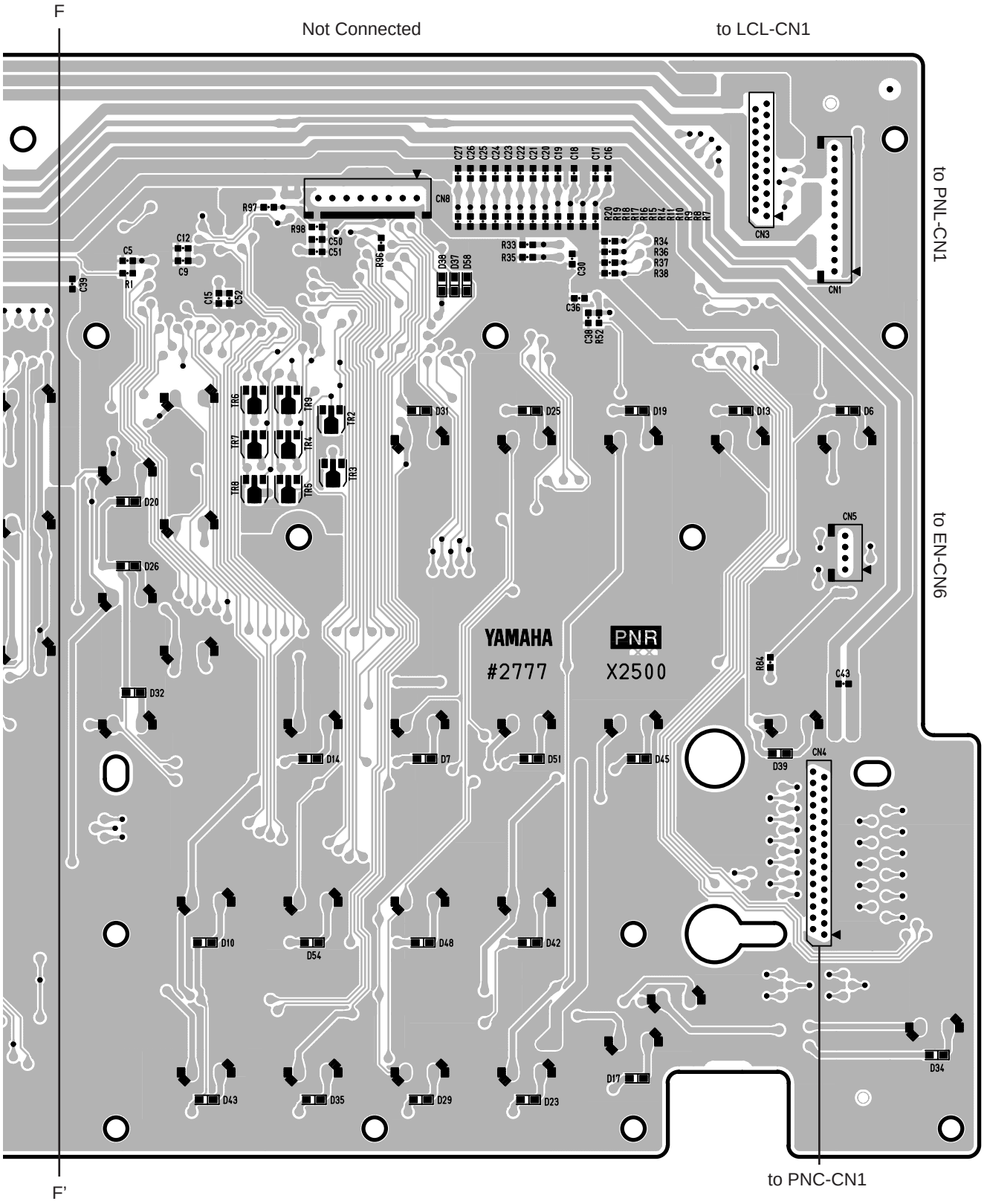

Pattern Side

Note: See parts list for details of circuit board component parts.

• PNC Circuit Board

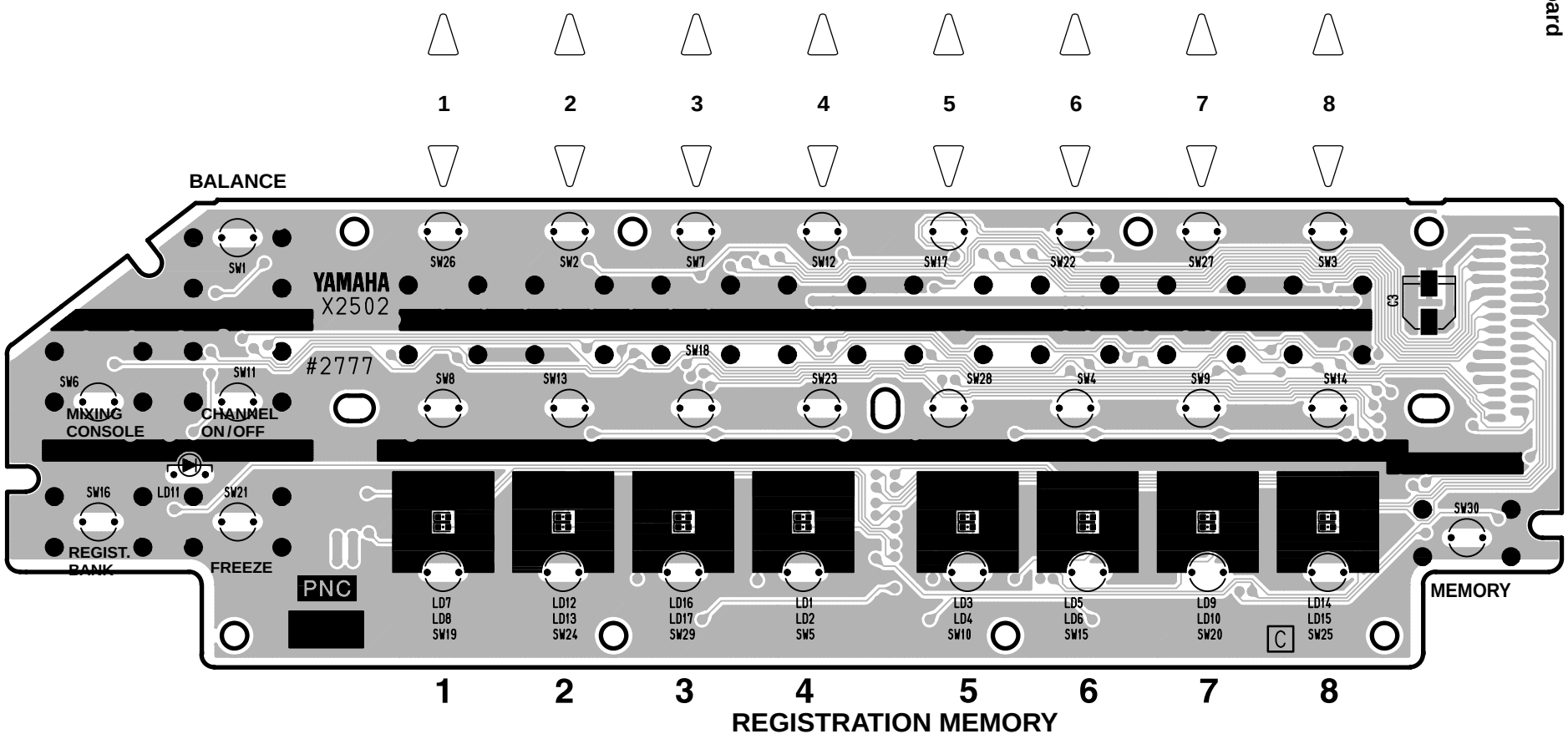

Component Side

2NA-V881100

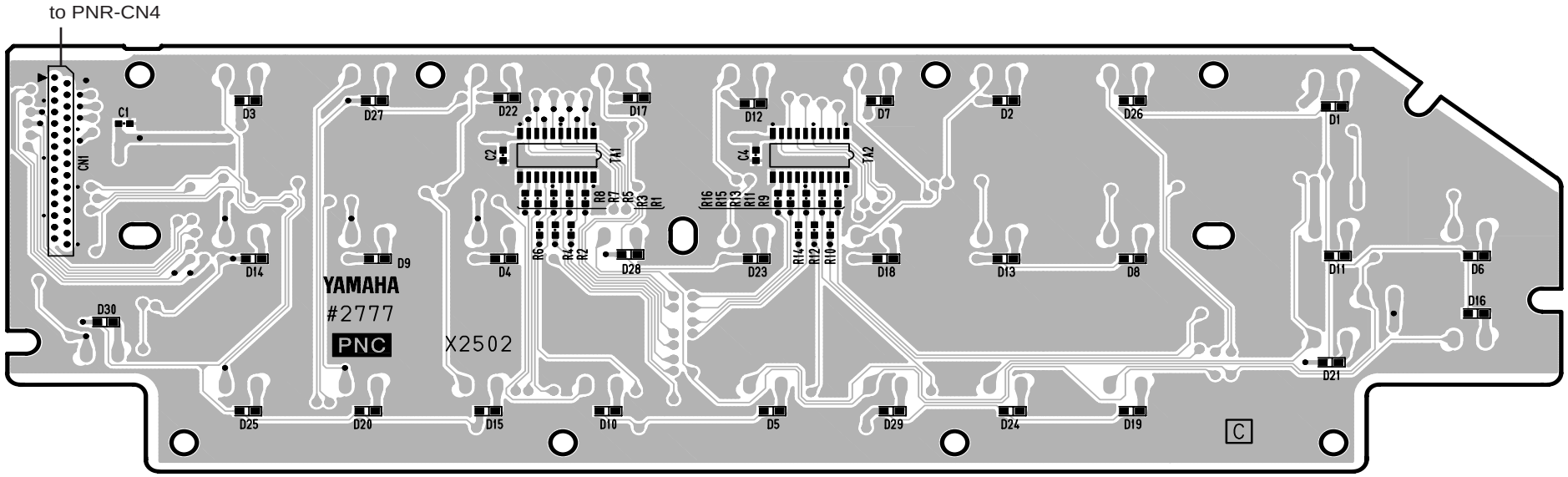

Pattern Side

Note: See parts list for details of circuit board component parts.

- **AJACK Circuit Board**

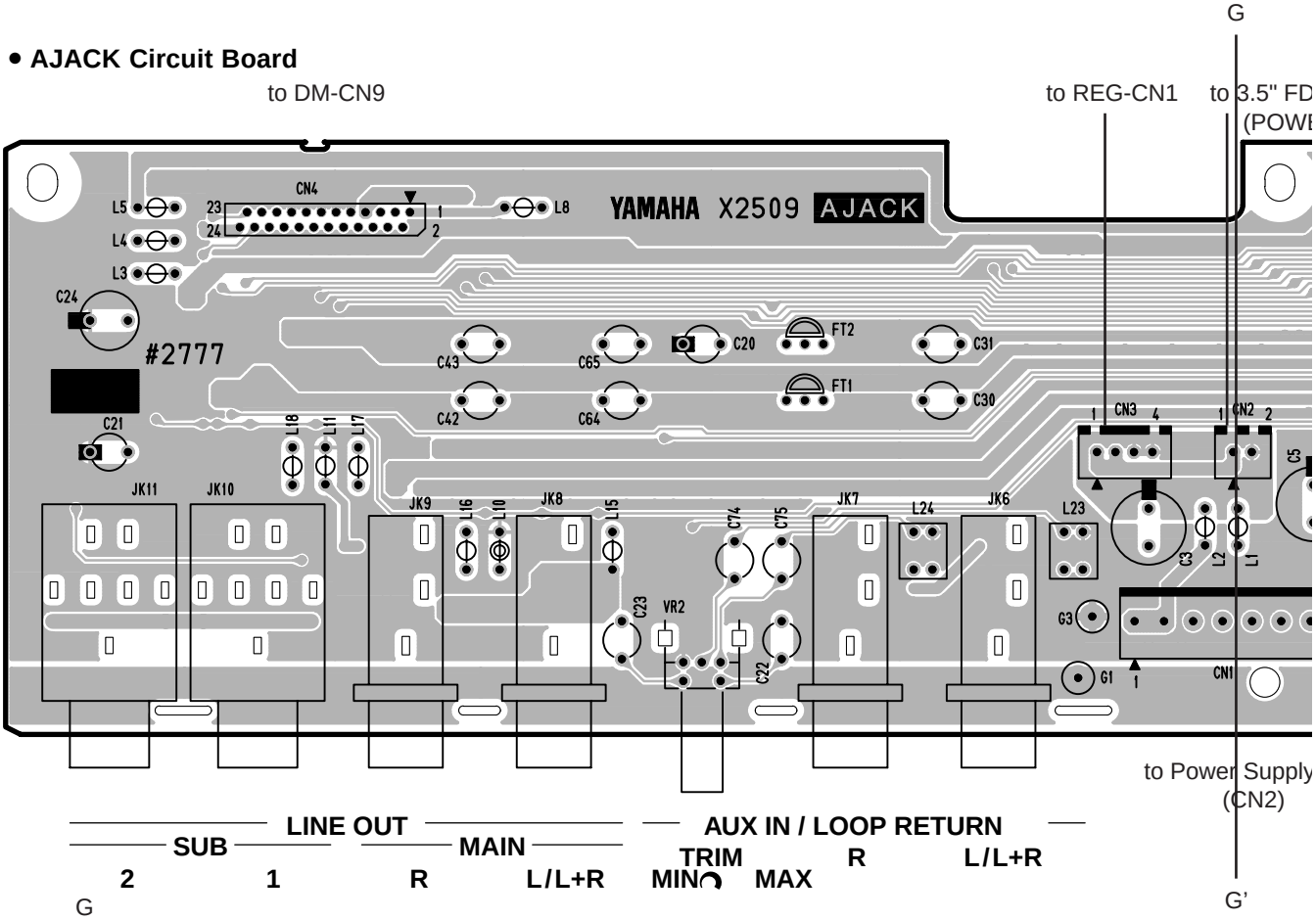

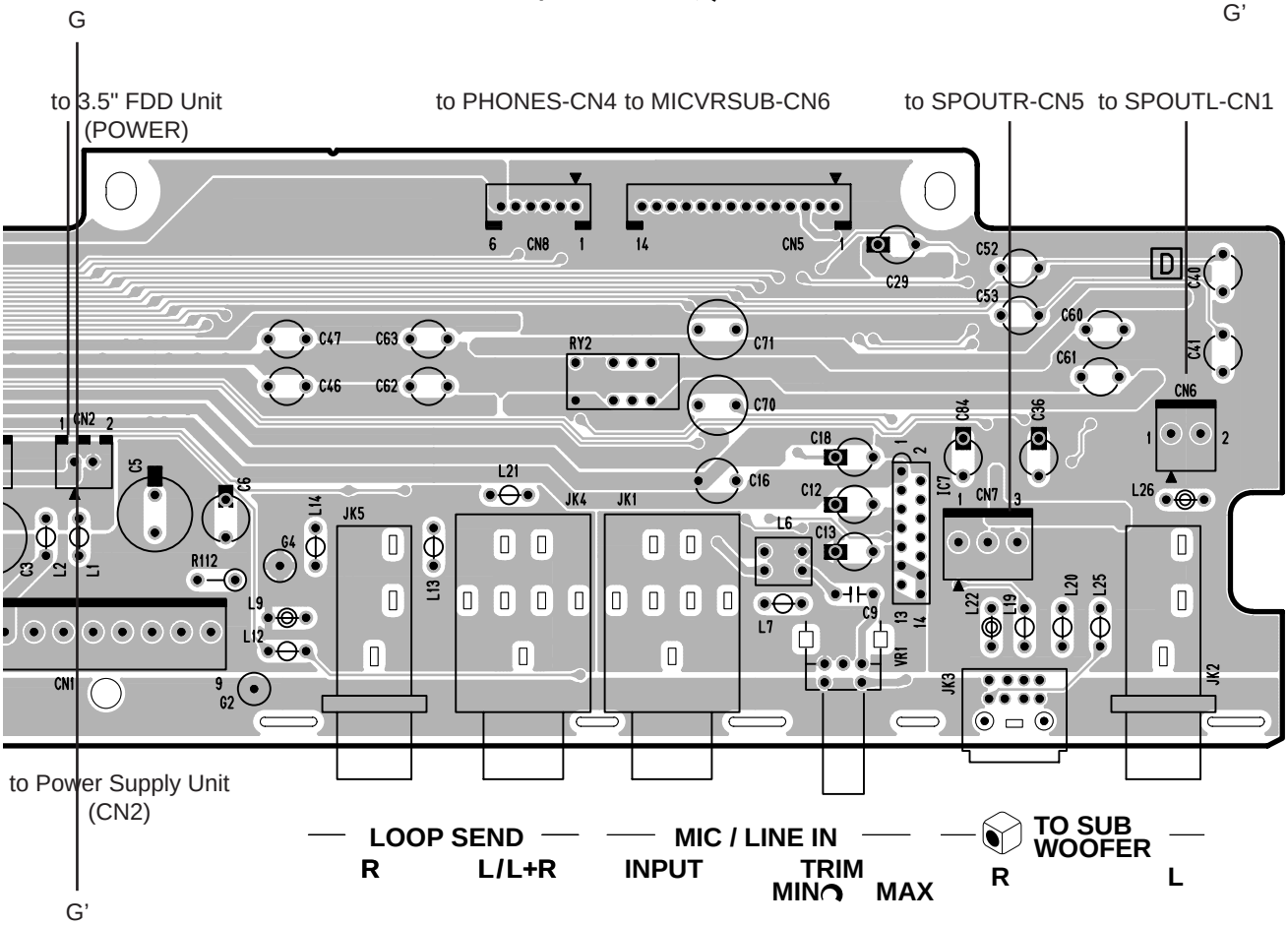

Component Side

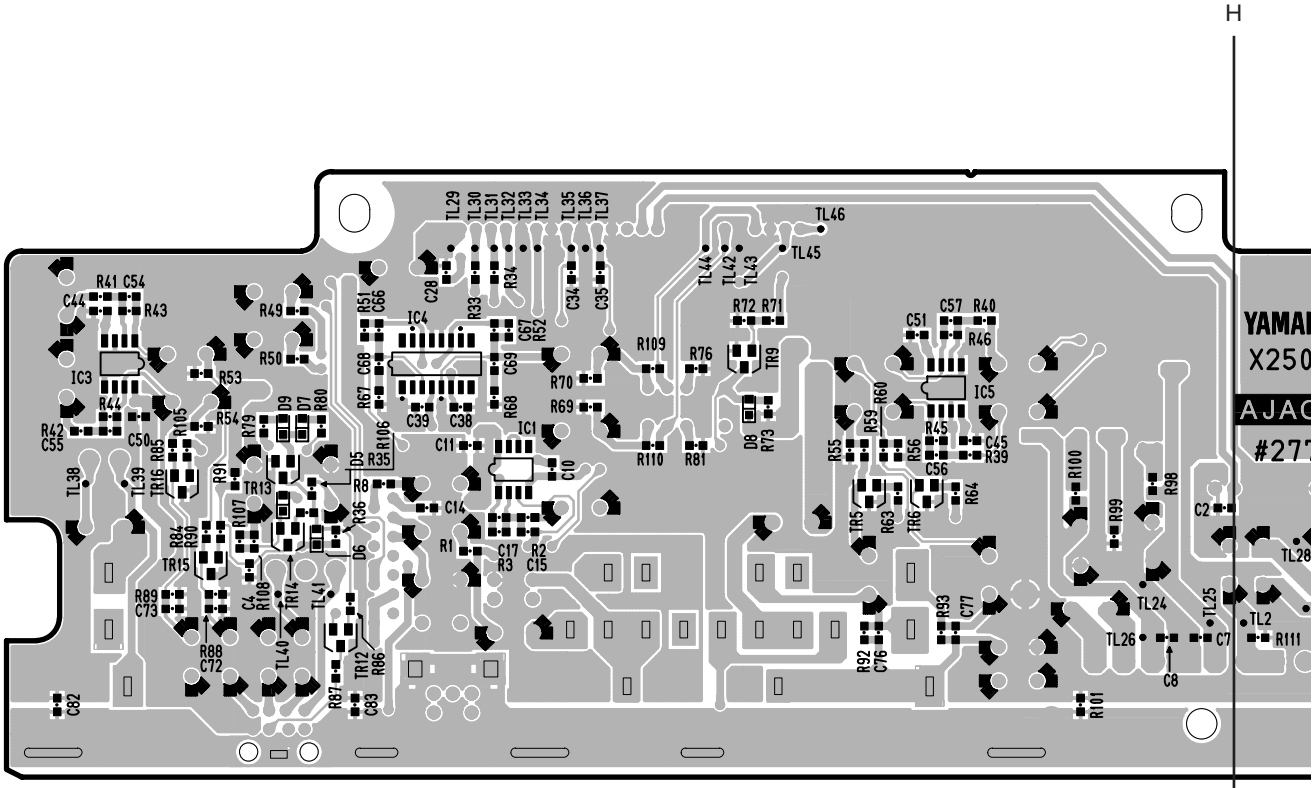

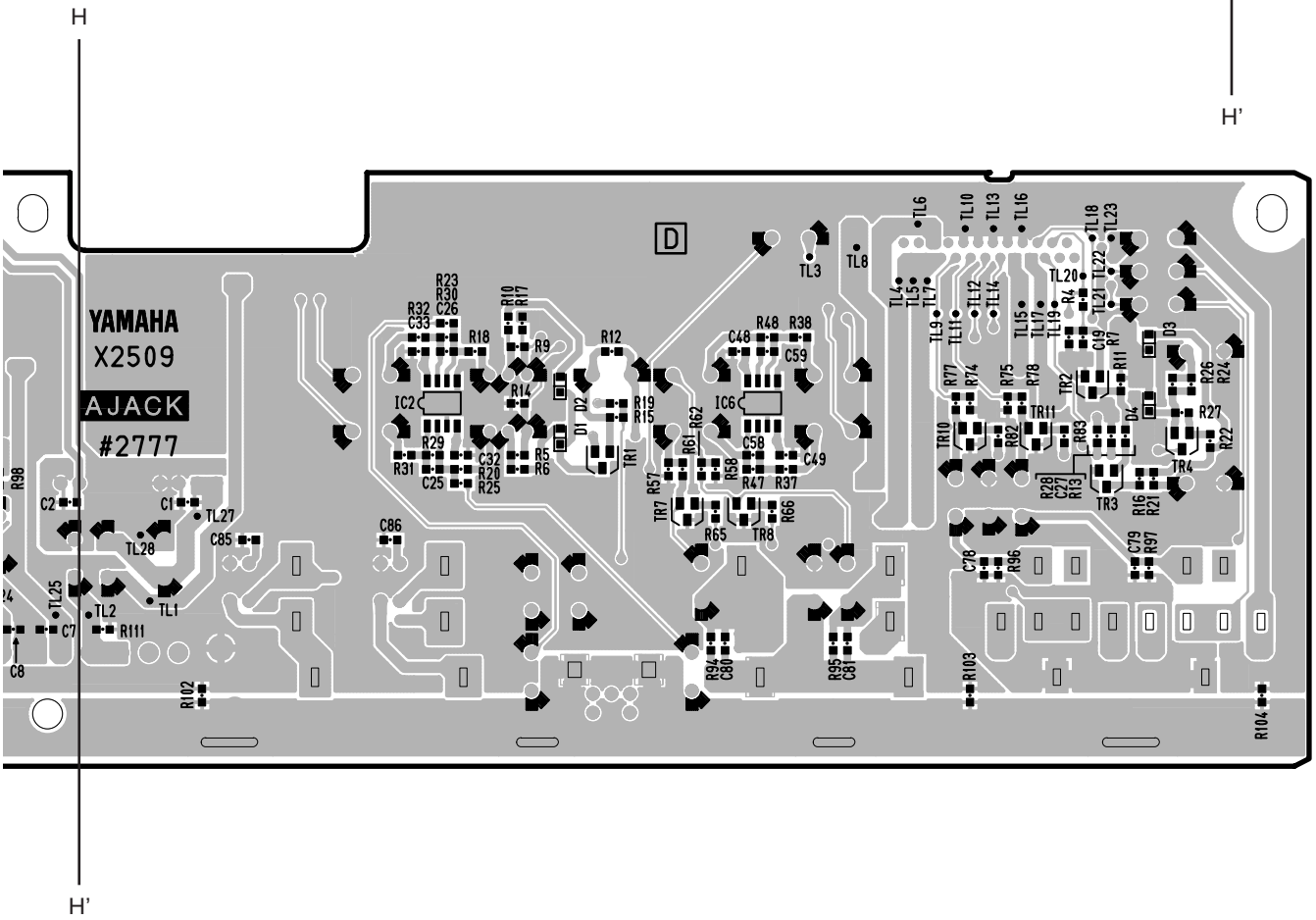

Pattern Side

Note: See parts list for details of circuit board component parts.

2NA-V879930 2

- **LCR Circuit Board**

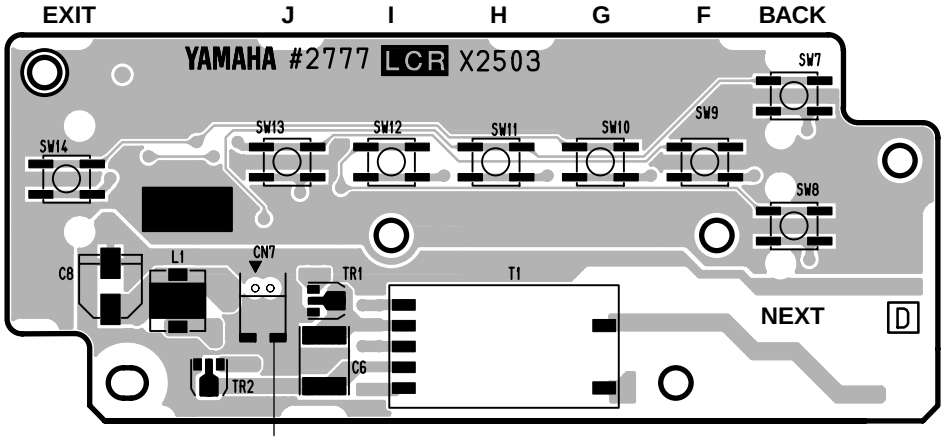

Component Side

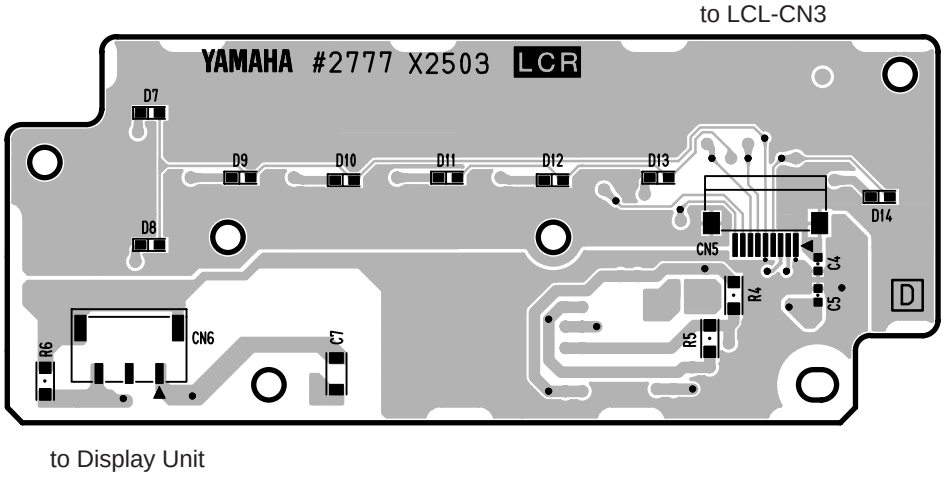

Pattern Side

2NA-V881120

Note: See parts list for details of circuit board component parts.

• LCL Circuit Board

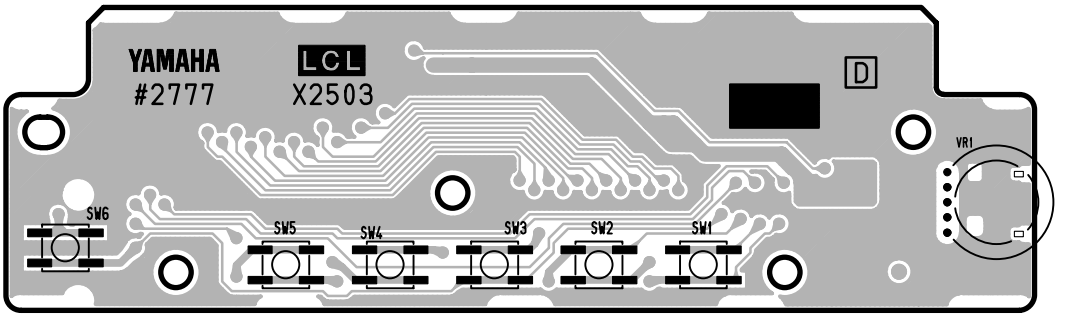

Component Side

to PNL-CN3 to PNR-CN3 to Display Unit to LCR-CN5

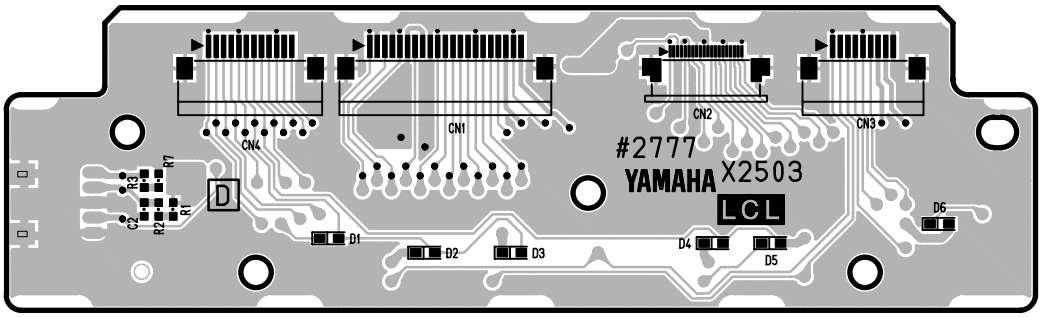

Pattern Side

• EN Circuit Board

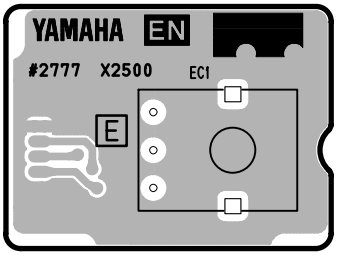

DATA ENTRY

Component Side

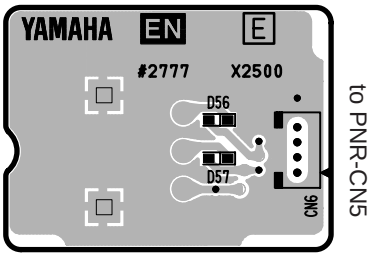

Pattern Side

LCL: 2NA-V881120
EN: 2NA-V881080

Note: See parts list for details of circuit board component parts.

• INLET Circuit Board

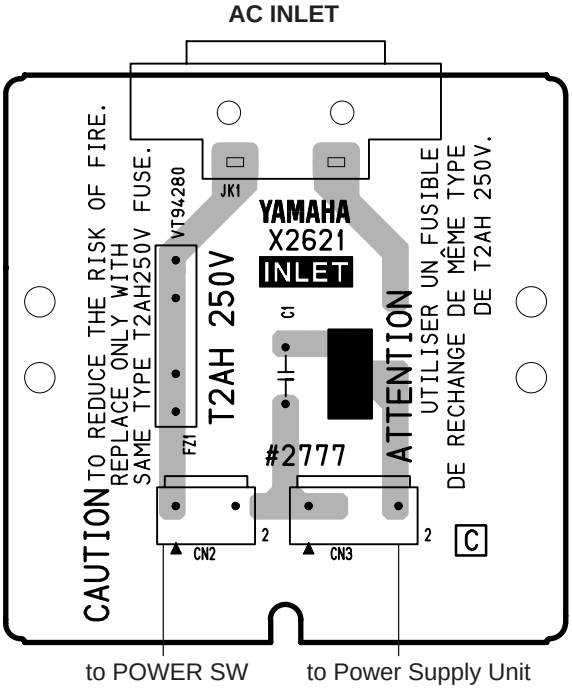

Component Side

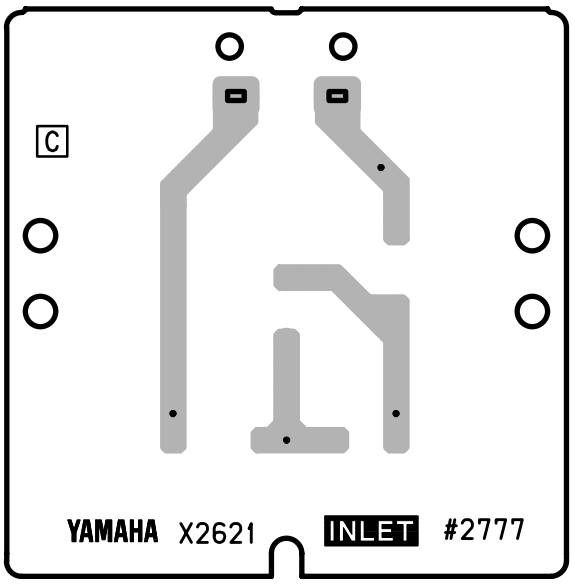

Pattern Side

• PC Circuit Board

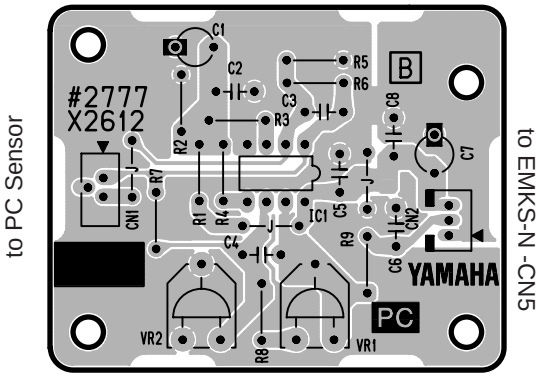

Component Side

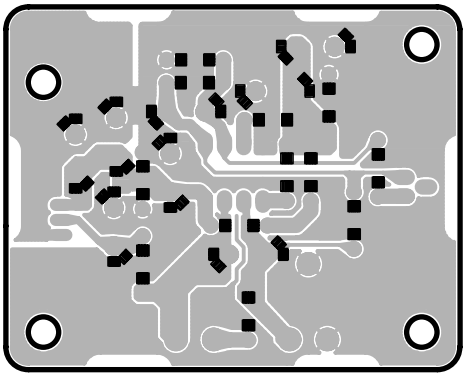

Pattern Side

INLET:	2NA-V895040
PC:	2NA-V894760

Note: See parts list for details of circuit board component parts.

• EMKS-N Circuit Board

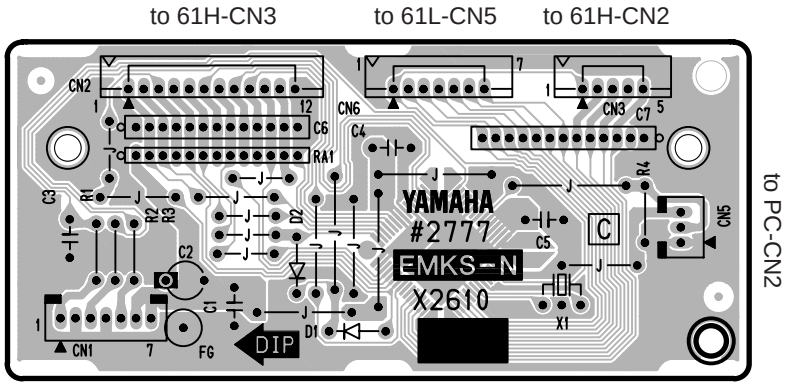

Component Side

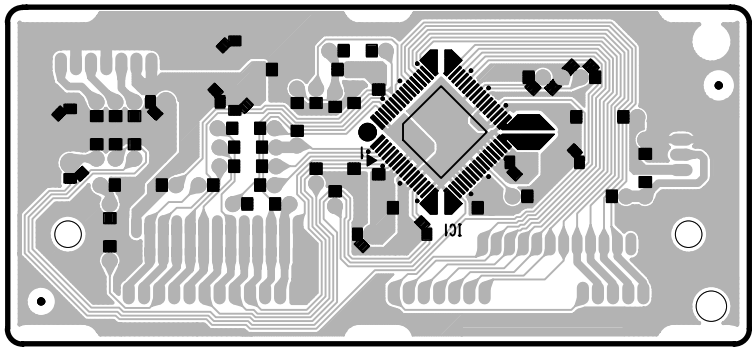

Pattern Side

• REG Circuit Board

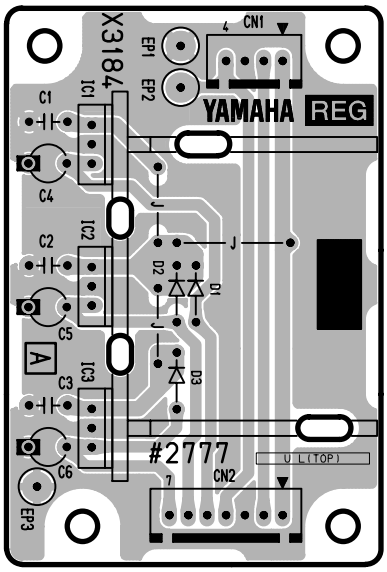

Component Side

EMKS-N: 2NA-V894600
REG: 2NA-V964100

Note: See parts list for details of circuit board component parts.

• SPOUTL Circuit Board

to AJACK-CN6

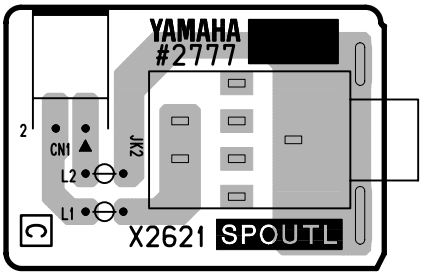

TO LEFT SPEAKER

Component Side

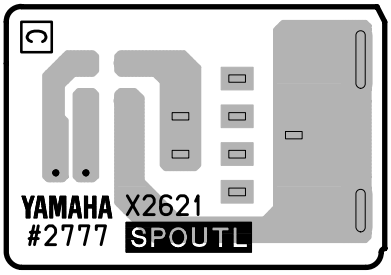

Pattern Side

• SPOUTR Circuit Board

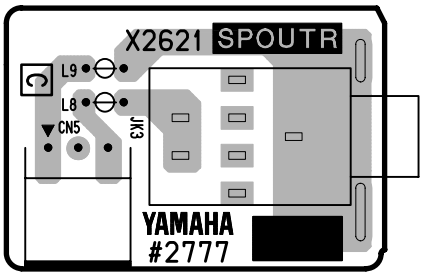

TO RIGHT SPEAKER

to AJACK-CN7

Component Side

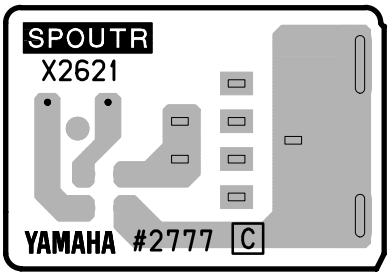

Pattern Side

• PHONES Circuit Board

to AJACK-CN8

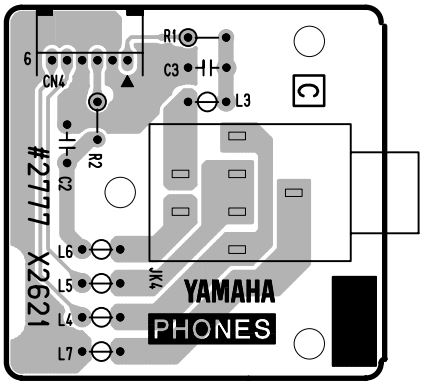

PHONES

Component Side

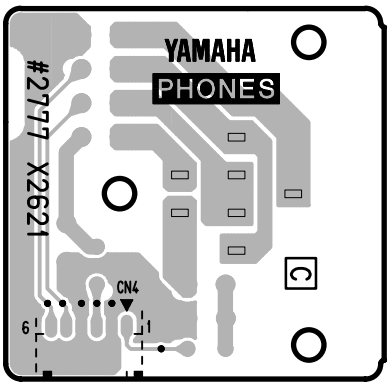

Pattern Side

SPOUTL:	2NA-V895040
SPOUTR:	2NA-V895040
PHONES:	2NA-V895040

Note: See parts list for details of circuit board component parts.

• MICVR Circuit Board

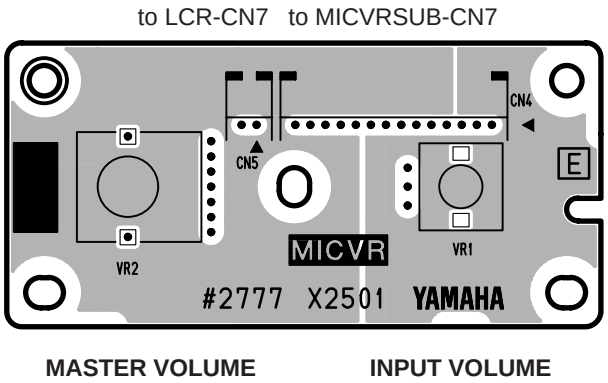

Component Side

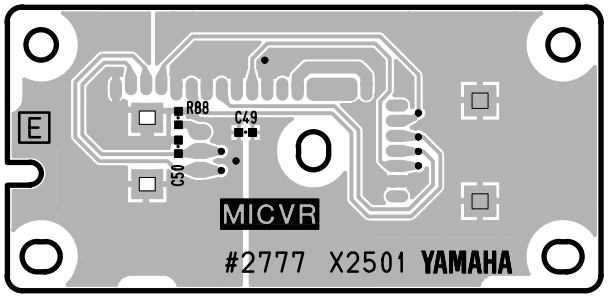

Pattern Side

• MICVRSUB Circuit Board

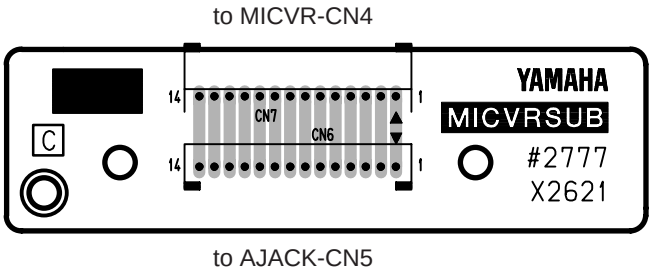

Component Side

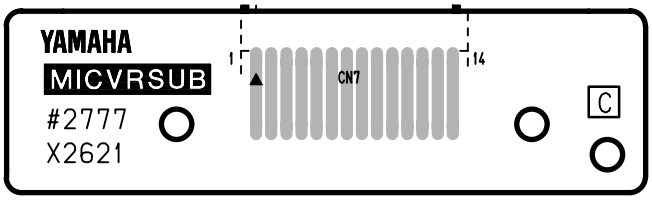

Pattern Side

MICVR: 2NA-V881090
MICVRSUB: 2NA-V895040

Note: See parts list for details of circuit board component parts.

■ CIRCUIT BOARDS (TRS-MS01)

• MAIN(A) Circuit Board

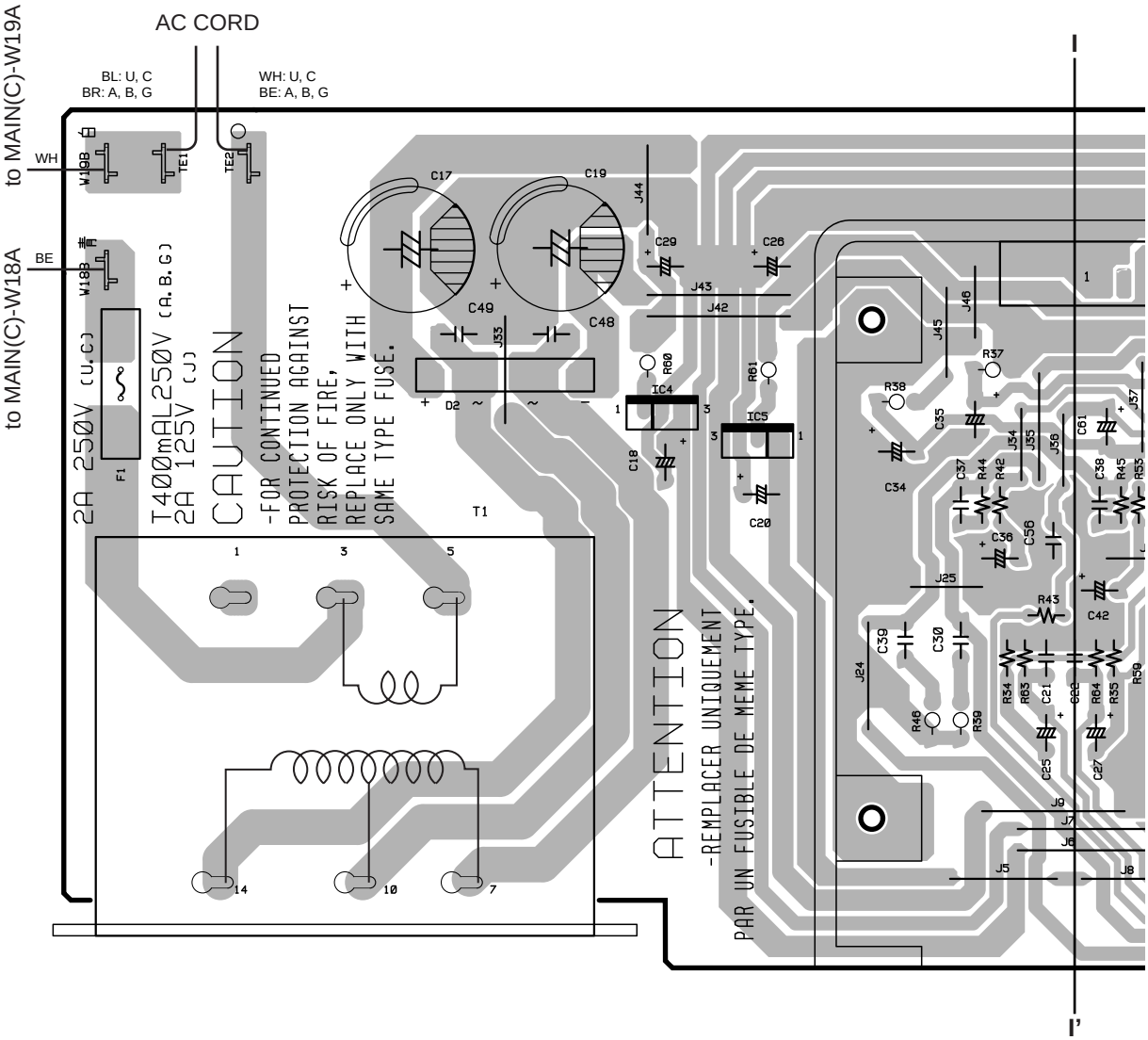

Pattern Side

● MAIN(A) Circuit Board

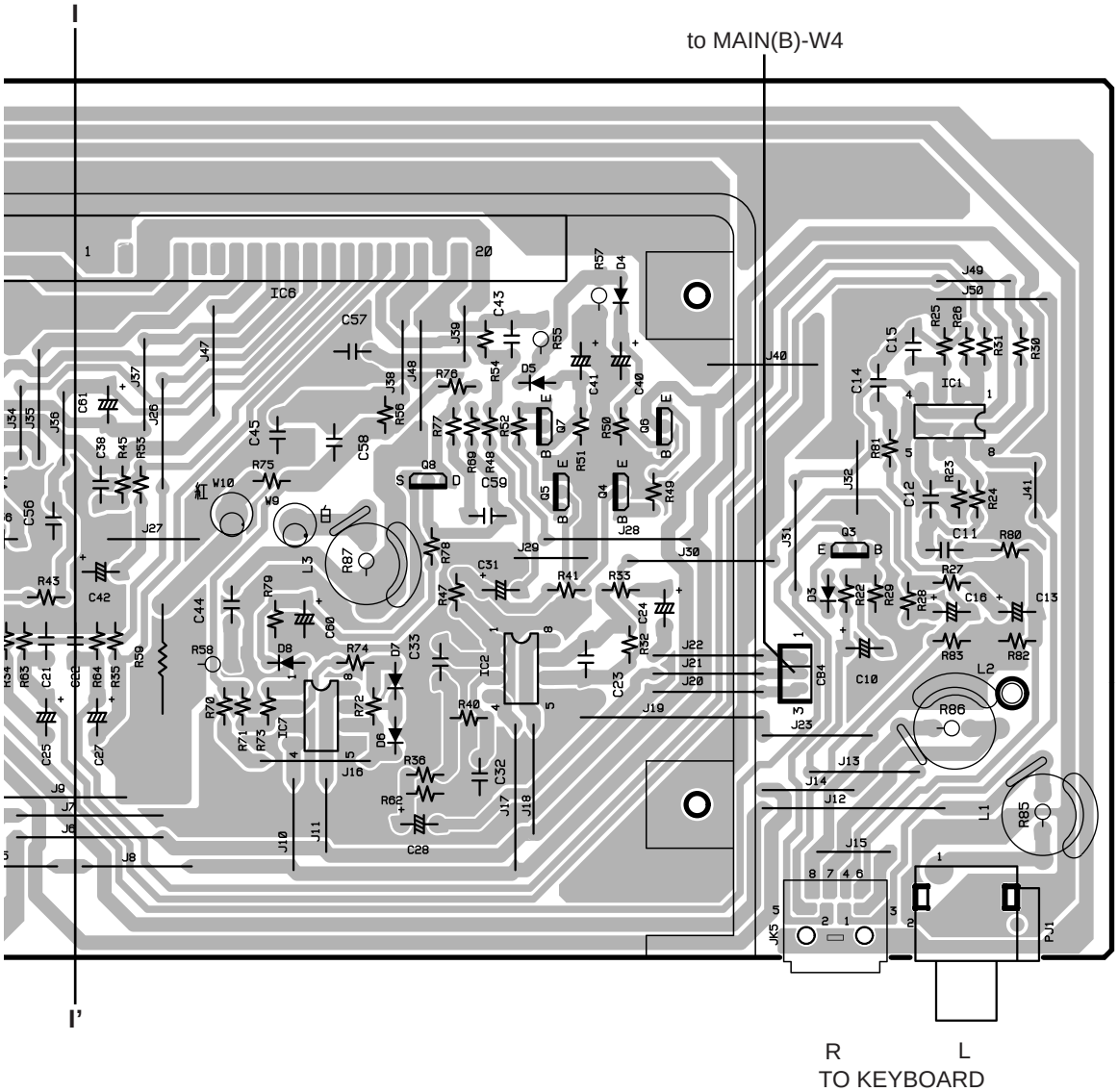

Pattern Side

Note: See parts list for details of circuit board component parts.

- **MAIN(B) Circuit Board**

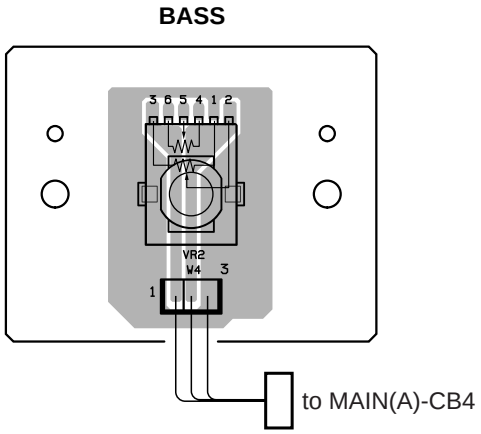

Pattern Side

- **MAIN(C) Circuit Board**

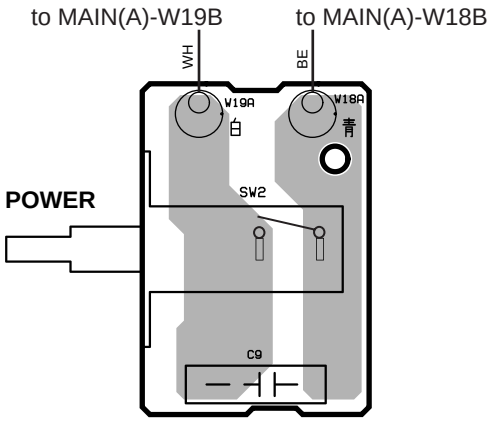

Pattern Side

- **MAIN(S) Circuit Board**

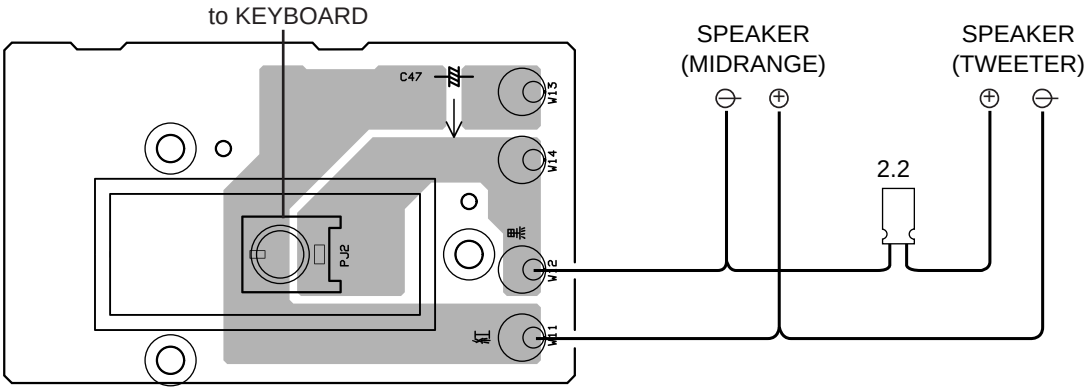

Pattern Side

Note: See parts list for details of circuit board component parts.

■ TEST PROGRAM

1. Preparation

To check the product, following measuring instruments and jigs are required.

Measuring Instruments: Frequency Conter, Level Meter (with JIS-C filter), Oscillator
Except as otherwise requires, use a stereo plug with a load of 33Ω and measure at the [PHONES] jack.

Jigs: Foot Volume (FC-7), MIDI cable, Floppy Disk (2HD and 2DD), Microphone, Computer, USB cable, TV (Monitor)

2. How to Enter the Test Program

Turn the power on with [C#2], [F2] and [G#2] keys pressed and held. (Fig.1)

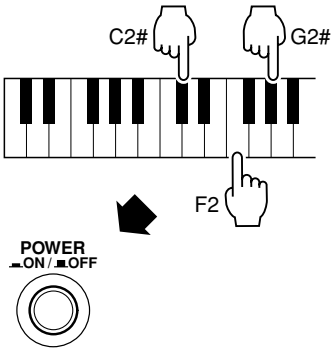

(Fig.1)

3. Test Procedure

1) When the test program starts to run, the LCD shows "TEST".
2) Press the [TEMPO -] button or the [TEMPO +] button to select test item.
3) Press the [STYLE START/STOP] button to execute the current test item.

If the test result is OK, press the [STYLE START/STOP] button or the leftmost key to return to the wait state.
If the test result is NG, press the leftmost key to return to the wait state.

4. Test Items

No.	LCD	Test Function and Judgment Criteria
1	001: Version	Displays the version of each ROM. ROM versionsare displayed alternately on the LCD
3	003: ROM Check1	Checks all ROMs connected to the CPU bus. Confirm that the LCD shows "ROM Check1 OK".
4	004: RAM Check1	Checks all RAMs connected to the CPU bus. Confirm that the LCD shows "RAM Check1 OK".
5	005: Flash Check1	Checks all flash memories connected to the CPU bus. Confirm that the LCD shows "Flash Check1 OK".
6	006: Wave ROM Check1	Checks all wave ROMs. Confirm that the LCD shows "Wave ROM Check OK".
9	009: FDD Check	Checks the floppy disk drive. Insert a disk to the drive and execute the test. Check both of 2HD and 2DD type disks. If the test result is OK, the LCD shows "FDD Check OK". If errors occur, the following messages are indicated on the LCD. 1) "FDD Check NG" (when the test result is NG.) 2) "NO FD" (when no disk is detected in the drive.) 3) "PROTECT FD" (when the disk is write-protected.) 4) "UNFORMAT FD" (when the disk is not formatted.)
10	010: HDD Chk(IDE)	Checks the hard disk. If the test result is OK, the LCD shows "HDD (IDE) OK". If errors occur, the following messages are indicated on the LCD. 1) "HDD (IDE) NG" (when the test result is NG.) 2) "NO HDD" (when no hard disk is detected.) *Format a harddisk drive with it installed on the Tyros. *Perform the HDD check more than 20 seconds after turning on the power.
12	012: Effect RAM Check	Checks all EFFECT RAMs. Confirm that the LCD shows the following message. Effect Check TG1 OK Effect Check TG2 OK
16	016: TG1 Check	Checks the tone generator 1. The sine waves between C2 and G4 automatically sound in order. Confirm that no abnomal sounds or noise are generated.
17	017: TG2 Check	Checks the tone generator 2. The sine waves between C2 and G4 automatically sound in order. Confirm that no abnomal sounds or noise are generated.
18	018: TG connection Check	Checks connection of the tone generator 1 and 2. The sine wave sounds for about 2 seconds. Confirm that no abnomal sounds or noise are generated.

19	019: Pitch Check	Checks pitch and volume decay. 1) Connect a frequency counter to the [PHONES] jack (either L or R) with a load of 33Ω and set the [MASTER VOLUME] knob to maximum. Confirm that the frequency counter shows the level of 441.43 ± 0.22[Hz]. 2) Connect a level meter to the [PHONES] jack (L, R) with 33Ωand set the [MASTER VOLUME] knob to minimum. Confirm that the levels of L and R are -60.0dBm or less.
20	020: Output R Check	Checks the output level of R channel. 1)Connect a level meter to the [PHONES] jack (L, R) with a load of 33Ω and set the [MASTER VOLUME] knob to maximum. Confirm that the output levels are as follows. L: -50.0dBm or less R: +6.2dBm ± 2dB 2)Connect a level meter to the [LINE OUT] jack (MAIN L/L+R, R) with a load of 10kΩ and set the [MASTER VOLUME] knob to maximum. Confirm that the output levels are as follows. L: -70.0dBm or less R: +14.8dBm ± 2dB 3)Connect a level meter to the [TO SUB WOOFER] jack (R) with a load of 470Ω and set the [MASTER VOLUME] knob to maximum. (L: Pin6-Pin3, R: Pin5-Pin3, Pin3: GND) Confirm that the output levels are as follows. L: -70 dBm or less R: +12.8dBm ± 2dB 4)Connect optional speakers and disconnect the plug from the [PHONES] jack. Confirm that only the speaker of R channel generates sound.
21	020: Output L Check	Checks the output level of L channel. 1)Connect a level meter to the [PHONES] jack (L, R) with a load of 33Ω and set the [MASTER VOLUME] knob to maximum. Confirm that the output levels are as follows. L: +6.2dBm ± 2dB R: -50.0dBm or less 2)Connect a level meter to the [LINE OUT] jack (MAIN L/L+R, R) with a load of 10kΩ and set the [MASTER VOLUME] knob to maximum. Confirm that the output levels are as follows. L: +14.8dBm ± 2dB R: -70.0dBm or less 3)Connect a level meter to the [TO SUB WOOFER] jack (R) with a load of 470Ω and set the [MASTER VOLUME] knob to maximum. (L: Pin6-Pin3, R: Pin5-Pin3, Pin3: GND) Confirm that the output levels are as follows. L: +12.8dBm ± 2dB R: -70 dBm or less 4)Connect optional speakers and disconnect the plug from the [PHONES] jack. Confirm that only the speaker of L channel generates sound.
22	022: Output Sub-1 Check	Checks the output level of LINE OUT SUB1. Connect a level meter to the [LINE OUT] jack (SUB1, SUB2) with a load of 10kΩ and set the [MASTER VOLUME] knob to maximum. Confirm that the output levels are as follows. SUB1: +0.2dBm ± 2dB SUB2: -80.0dBm or less
23	023: Output Sub-2 Check	Checks the output level of LINE OUT SUB2. Connect a level meter to the [LINE OUT] jack (SUB1, SUB2) with a load of 10kΩ and set the [MASTER VOLUME] knob to maximum. Confirm that the output levels are as follows. SUB1: -80.0dBm or less SUB2: +0.2dBm ± 2dB

28	028: EQ Low Check	Checks the frequency of EQ LOW. The sine wave of 65.4Hz is output from the [LINE OUT] jack (MAIN L/L+R, MAIN R, SUB1, SUB2).
29	029: EQ Mid Check	Checks the frequency of EQ MID. The sine wave of 523Hz is output from the [LINE OUT] jack (MAIN L/L+R, MAIN R, SUB1, SUB2).
30	030: EQ High Check	Checks the frequency of EQ HIGH. The sine wave of 4186Hz is output from the [LINE OUT] jack (MAIN L/L+R, MAIN R, SUB1, SUB2).
31	031: SP Mute Check	Checks the SP mute. When this test is executed, the sine wave of 4186Hz is output from the [LINE OUT] jack (MAIN L/L+R, MAIN R). Confirm that the 'ON' and 'OFF' of SP MUTE can be toggled by pressing the [NEXT] button and the [BACK] button.
32	032: Mute Check	Checks the mute. When this test is executed, the sine wave of 4186Hz is output from the [LINE OUT] jack (MAIN L/L+R, MAIN R). Confirm that the 'ON' and 'OFF' of MUTE can be toggled by pressing the [NEXT] button and the [BACK] button.
33	033: D/A Noise Check	Checks the level of D/A noise. Checks the level of D/A noise when any key is depressed. 1)Connect a level meter to the [PHONES] jack (L, R) with a load of 33Ω and set the [MASTER VOLUME] kbob to maximum. Confirm the levels of D/A noise are as follows. L: -85.0dBm or less R: -85.0dBm or less 2)Connect a level meter to the [LINE OUT] jack (L/L+R, R) with a load of 10kΩ and set the [MASTER VOLUME] knob to maximum. Confirm the levels of D/A noise are as follows. L: -75.0dBm or less R: -75.0dBm or less 3)Connect a level meter to the [TO SUB WOOFER] jack (R) with a load of 470Ω and set the [MASTER VOLUME] knob to maximum. (L: Pin6-Pin3, R: Pin5-Pin3, Pin3: GND) Confirm the levels of D/A noise are as follows. L: -85.0dBm or less R: -85.0dBm or less 4)Connect a level meter to the [LINE OUT] jack (SUB1) with a load of 10kΩ and set the [MASTER VOLUME] knob to maximum. Confirm that the level of D/A noise is -80.0dBm or less. 5)Connect a level meter to the [LINE OUT] jack (SUB2) with a load of 10kΩ and set the [MASTER VOLUME] knob to maximum. Confirm that the level of D/A noise is -80.0dBm or less.
34	034: SW,LED Check	Checks all switches and LEDs on the panel When this test is executed, the LCD shows the name of switches in order. Press the switch indicated on the LCD. When the test result is OK, the note corresponding to the switch sounds. (See P.71 TABLE 1)Besides, the LED lights up if it is a LED-attached switch. When errors are detected, following messages are indicated. 1) "SW,LED Check NG" (when the test result is NG.) 2) "NG" (when unfit switch is pressed.) 3) "Over Two SW" (when plural switches are pressed at the same time.) After all switches are finished, the LCD shows "DIAL DOWN 50". Turn the rotary encoder counterclockwise and confirm that the value on the LCD decreases. Then the LCD shows "DIAL UP 0", so turn the rotary encoder clockwise and cinfirm that the value increases. Confirm that the LCD shows "SW, LED Check OK" when the value reaches "100".

35	035: All Panel LED On Check	All LEDs light up. Confirm that all LEDs on the panel light up. (including "MIC SIGNAL" and "OVER") * Dual color LEDs illuminate orange.
36	036: Red LED On Check	All of red LEDs light up. Confirm that all of red LEDs on the panel light up. * Dual color LEDs illuminate red.
37	037: Green LED On Check	All of green LEDs light up. Confirm that all of green LEDs on the panel light up. * Dual color LEDs illuminate green.
38	038: Blue LED On Check	All of blue LEDs light up. Confirm that all of blue LEDs on the panel light up.
39	039: All LCD On Check	All dots of the LCD turn on. Confirm that all dots of the LCD turn on and that whole screen turns to black.
40	040: All LCD Off Check	All dots of the LCD turn off. Confirm that all dots of the LCD turns off and that whole screen turns to white.
48	048: Pedal 1 Check	Checks the pedal 1. Connect the FC-7 to the [ASSIGNABLE FOOT PEDAL] jack (1) and execute the test with the pedal completely released. Confirm that the LCD shows "DOWN" and the note of C3 sounds when the pedal is depressed. Confirm that the LCD shows "UP" and the note of C4 sounds when the pedal is released. Disconnect the pedal from the jack and confirm that the LCD shows "Pedal 1 Check OK".
49	049: Pedal 2 Check	Checks the edal 2. Connect the FC-7 to the [ASSIGNABLE FOOT PEDAL] jack (2) and execute the test with the pedal completely released. Confirm that the LCD shows "DOWN" and the note of C3 sounds when the pedal is depressed. Confirm that the LCD shows "UP" and the note of C4 sounds when the pedal is released. Disconnect the pedal from the jack and confirm that the LCD shows "Pedal 2 Check OK".
50	050: Pedal 3 Check	Checks the pedal 3. Connect the FC-7 to the [ASSIGNABLE FOOT PEDAL] jack (3) and execute the test with the pedal completely released. Confirm that the LCD shows "DOWN" and the note of C3 sounds when the pedal is depressed. Confirm that the LCD shows "UP" and the note of C4 sounds when the pedal is released. Disconnect the pedal from the jack and confirm that the LCD shows "Pedal 3 Check OK".
51	051: Pitch Bend Wheel Check	Checks the pitch bend wheel. When this test is executed, the LCD shows "Pitch Bend Down". Turn the pitch bend wheel toward 'DOWN' and confirm that the value on the LCD changes from 64 to 0. Confirm that the note of C3 sounds and the LCD shows "Pitch Bend Up" when the wheel reaches 'DOWN' position. Next, turn the wheel toward 'UP' and confirm that the value changes from 0 to 127. Confirm that the note of C4 sounds and the LCD shows "Pitch Bend Center" when the wheel reaches 'UP' position. Bring back the wheel to the center and confirm that the LCD shows "Pitch Bend Wheel Check OK".
52	052: Modulation Wheel Check	Checks the modulation wheel. Set the modulation wheel to 'MIN' position and execute the test. The LCD shows "Modulation Up", so turn the wheel toward 'MAX' and confirm that the value on the LCD changes from 0 to 127. Confirm that the note of C3 sounds and the LCD shows "Modulation Down" when the wheel reaches 'MAX' position. Next, turn the wheel toward 'MIN' and confirm that the value changedhs from 127 to 0. Confirm that the note of C4 sounds and the LCD shows "Modulation Wheel Check OK" when the wheel reaches 'MIN' position.

53	053: After Touch Check	Checks the after touch. Confirm that the note of C3 sounds and the LCD shows "After Touch Check Start" when any key is depressed. Confirm that the value on the LCD increases according to the strength of a press. Confirm that the note of C4 sounds and the LCD shows "After Touch OK" when the value reaches 127 (maximum). * At this test, pressing the leftmost key does not make the system return to the wait state. Press the [STYLE START/STOP] button to return the wait state.
54	054: Sub Out Check	Detects a plug insertion at the Sub Out. Insert a plug into the [LINE OUT] jack (SUB1) and confirm that the note of C3 sounds and the LCD shows "SUB1 IN". Disconnect the plug from the [LINE OUT] jack (SUB1) and confirm that the note of C4 sounds. Insert the the plug into the [LINE OUT] jack (SUB2) and confirm that the note of C3 sounds and the LCD shows "SUB2 IN". Disconnect the plug from the [LINE OUT] jack (SUB2) and confirm that the note of C4 sounds and the LCD shows "Sub Out Check OK".
56	056: MIDI Check	Checks the MIDI. Connect 'IN' and 'OUT' of the [MIDI A] jack, 'IN' and 'OUT' of the [MIDI B] jack respectively via a MIDI cable and execute the test. Confirm that the note of C4 sounds and the LCD shows "MIDI-A Check OK", "MIDI B Check OK".
58	058: USB Check	Checks the USB. Connect the product and a computer via a USB cable and execute the test. Confirm the LCD shows "USB Chk In". Confirm that the note of C4 sounds and the LCD shows "USB Chk OK". * Before executing the test, install the USB-MIDI driver on the computer and complete the setting of "THRU".
64	064: MIC Check	Checks the input level of MIC/LINE IN. Connect a level meter to the [LOOP SEND] jack (L/L+R, R) with a load of 10kΩ. Apply a sine wave of -50dBm into the [MIC/LINE IN INPUT] jack with a load of 33Ω and set the [INPUT VOLUME] knob and the [MIC/LINE IN TRIM] knob to maximum. Confirm that the level meter reads the following value. L: +14.0dBm ± 2dB R: +14.0dBm ± 2dB Next, set the [INPUT VOLUME] knob and the [MIC/LINE IN TRIM] knob to minimum. Confirm that the level meter reads the following value. L: -65.0dBm or less R: -65.0dBm or less
65	065: ROM Check2	Checks all ROMs connected to the CPU bus. Confirm that the LCD shows "ROM Check2 OK".
66	066: RAM Check2	Checks all RAMs connected to the CPU bus. Confirm that the LCD shows "RAM Check2 OK".
67	067: Flash Check2	Checks all flash memories connected to CPU bus. (It takes about 90 seconds.) Confirm that the LCD shows "Flash Check2 OK".
69	069: Wave ROM Check2	Checks all wave ROMs. (It takes about 30 seconds.) Confirm that the LCD shows "Wave ROM Check2 OK".
71	071: Effect RAM Check2	Checks all effect RAMs. Confirm that the LCD shows the folloing messsage. Effect Check TG1 OK Effect Check TG2 OK
72	072: Ext. Wave ROM Check	Checks the flash ROM connected to the expansion socket. Cofirmt that the LCD shows "Ext. Wave ROM Check OK".

80	080: VIDEO OUT NTSC RGB	Checks VIDEO OUT (NTSC RGB). Connect the video input jack of a TV set and the [VIDEO OUT] jack of the product, and execute the test. Confirm that red, blue and green bars are displayed on the monitor.
81	081: VIDEO OUT PAL RGB	Checks VIDEO OUT (PAL RGB). Connect the video input jack of a TV set and the [VIDEO OUT] jack of the product, and execute the test. Confirm that red, blue and green bars are displayed on the monitor.
84	084: Factory Set	Factory Set The data of flash ROM is initialized to factory preset at the next time the power is turned on. Confirm that the LCD shows "Factory Set OK".
86	086: Test Exit	Test Exit Exit the test program and return to the play mode.

0dBm = 0.775V

- Power On Reset
  Turn on the power with [F#5], [G5] and [A#5] keys pressed and held. The data of flash ROM is initialized to factory preset when the system starts to run.
  Confirm that keys pressed for the Power On Reset execution does not sound when the system enters the play mode.

■ TABLE 1

Order No.	Switch Name	LED	Note	Order No.	Switch Name	LED	Note
1	VOCAL HARMONY	VOCAL HARMONY	C2	50	INTRO 2	INTRO 2	C2
2	TALK	TALK	C#2	51	INTRO 3	INTRO 3	C#2
3	EFFECT	EFFECT	D2	52	MAIN A	MAIN A	D2
4	VH TYPE SELECT	-	D#2	53	MAIN B	MAIN B	D#2
5	MIC SETTING	-	E2	54	MAIN C	MAIN C	E2
6	SP1	SP1	F2	55	MAIN D	MAIN D	F2
7	SP2	SP2	F#2	56	BREAK	BREAK	F#2
8	SP3	SP3	G2	57	ENDING 1	ENDING 1	G2
9	SP4	SP4	G#2	58	ENDING 2	ENDING 2	G#2
10	LOOP	LOOP	A2	59	ENDING 3	ENDING 3	A2
11	FADE IN/OUT	FADE IN/OUT	A#2	60	SYNC STOP	SYNC STOP	A#2
12	REC	REC	B2	61	SYNC START	SYNC START	B2
13	TOP	-	C3	62	START/STOP (STYLE)	START/STOP (STYLE)	C3
14	SONG START/STOP	SONG START/STOP	C#3	63	A	-	C#3
15	REW	-	D3	64	B	-	D3
16	FF	-	D#3	65	C	-	D#3
17	SONG1	SONG1	E3	66	D	-	E3
18	SONG4	SONG4	F3	67	E	-	F3
19	SONG2	SONG2	F#3	68	DIRECT ACCESS	-	F#3
20	SONG5	SONG5	G3	69	BACK	-	G3
21	SONG3	SONG3	G#3	70	NEXT	-	G#3
22	SONG6	SONG6	A3	71	F	-	A3
23	POP&ROCK	POP&ROCK	A#3	72	G	-	A#3
24	SWING&JAZZ	SWING&JAZZ	B3	73	H	-	B3
25	LATIN	LATIN	C4	74	I	-	C4
26	WORLD	WORLD	C#4	75	J	-	C#4
27	BALLAD	BALLAD	D4	76	EXIT	-	D4
28	R&B	R&B	D#4	77	BALANCE	-	D#4
29	BALLROOM PARTY	BALLROOM PARTY	E4	78	1-U	-	E4
30	PRESET	PRESET	F4	79	2-U	-	F4
31	DANCE	DANCE	F#4	80	3-U	-	F#4
32	COUNTRY	COUNTRY	G4	81	4-U	-	G4
33	MOVIE&SHOW	MOVIE&SHOW	G#4	82	5-U	-	G#4
34	USER/DISK	USER/DISK	A4	83	6-U	-	A4
35	ACMP	ACMP	A#4	84	7-U	-	A#4
36	OTS LINK	OTS LINK	B4	85	8-U	-	B4
37	AUTO FILL IN	AUTO FILL IN	C5	86	MIXING CONSOLE	-	C5
38	METRONOME	METRONOME	C#5	87	CHANNEL ON/OFF	-	C#5
39	TAP TEMPO	-	D5	88	1-L	-	D5
40	TEMPO-	-	D#5	89	2-L	-	D#5
41	TEMPO+	-	E5	90	3-L	-	E5
42	TRANSPOSE-	-	F5	91	4-L	-	F5
43	TRANSPOSE+	-	F#5	92	5-L	-	F#5
44	MULTI PAD 1	MULTI PAD 1	G5	93	6-L	-	G5
45	MULTI PAD 2	MULTI PAD 2	G#5	94	7-L	-	G#5
46	MULTI PAD 3	MULTI PAD 3	A5	95	8-L	-	A5
47	MULTI PAD 4	MULTI PAD 4	A#5	96	REGIST. BANK	-	A#5
48	M.PAD STOP	-	B5	97	FREEZE	FREEZE	B5
49	INTRO 1	INTRO 1	C6	98	REGIST.1	REGIST.1	C6

Order No.	Switch Name	LED	Note	Order No.	Switch Name	LED	Note
99	REGIST.2	REGIST.2	C2	127	BASS	BASS	E4
100	REGIST.3	REGIST.3	C#2	128	PAD	PAD	F4
101	REGIST.4	REGIST.4	D2	129	CUSTOM VOICE	CUSTOM VOICE	F#4
102	REGIST.5	REGIST.5	D#2	130	ORGAN	ORGAN	G4
103	REGIST.6	REGIST.6	E2	131	BRASS	BRASS	G#4
104	REGIST.7	REGIST.7	F2	132	FLUTE/CLARINET	FLUTE/CLARINET	A4
105	REGIST.8	REGIST.8	F#2	133	PERC./DRUM KIT	PERC./DRUM KIT	A#4
106	MEMORY	-	G2	134	SYNTH	SYNTH	B4
107	ENTER	-	G#2	135	USER	USER	C5
108	DEMO	-	A2	136	PART SELECT LEFT	PART SELECT LEFT	C#5
109	HELP	-	A#2	137	PART SELECT R1	PART SELECT R1	D5
110	FUNCTION	-	B2	138	PART SELECT R2	PART SELECT R2	D#5
111	SOUND CREATOR	-	C3	139	PART SELECT R3	PART SELECT R3	E5
112	DIGITAL RECORDING	-	C#3	140	LEFT HOLD	LEFT HOLD	F5
113	MUSIC FINDER	MUSIC FINDER	D3	141	PART ON/OFF LEFT	ON/OFF LEFT	F#5
114	OTS1	OTS1	D#3	142	PART ON/OFF R1	PART ON/OFF R1	G5
115	OTS2	OTS2	E3	143	PART ON/OFF R2	PART ON/OFF R2	G#5
116	OTS3	OTS3	F3	144	PART ON/OFF R3	PART ON/OFF R3	A5
117	OTS4	OTS4	F#3	145	HARMONY ECHO	HARMONY ECHO	A#5
118	PIANO	PIANO	G3	146	INITIAL TOUCH	INITIAL TOUCH	B5
119	STRINGS	STRINGS	G#3	147	SUSTAIN	SUSTAIN	C6
120	TRUMPET	TRUMPET	A3	148	POLY/MONO	POLY/MONO	C2
121	GUITAR	GUITAR	A#3	149	DSP	DSP	C#2
122	ACCORDION	ACCORDION	B3	150	DSP VARIATION	DSP VIRIATION	D2
123	ORGAN FLUTES	ORGAN FLUTES	C4	151	UPPER OCTAVE -	-	D#2
124	E.PIANO	E.PIANO	C#4	152	UPPER OCTAVE +	DISK IN USE	E2
125	CHOIR	CHOIR	D4	153	GUIDE	GUIDE	F2
126	SAXOPHONE	SAXOPHONE	D#4				

SYSTEM RESET

The explanations here apply to the [FUNCTION] → UTILITY → SYSTEM RESET display.

● Factory Reset - Restoring the factory programmed settings

This function lets you restore the status of the TYROS to the original factory settings. You can set whether or not each of the following six items is to be restored to its original factory settings before executing the operation.

SYSTEM SETUP	Restores the System Setup parameters to the original factory settings. You can also restore only the System Setup settings by simultaneously holding down the highest key on the keyboard (C7) and turning on the power. Refer to the separate Oners Manual Data List booklet for details about which parameters belong to the System Setup.
MIDI SETUP	Restores the MIDI settings including the MIDI templates on the User drive to the original factory status.
USER EFFECT	Restores the User Effect settings including the user effect types, user master EQ types, user compressor types, and user vocal harmony types created via the Mixing Console display to the original factory settings.
MUSIC FINDER	Restores the Music Finder data (all records) to the original factory settings.
FILES & FOLDERS	Deletes all files and folders stored in the User drive.
CUSTOM VOICE	Deletes all Custom Voices on the Preset drive.

● Custom Reset - Recalling your own custom settings

The four categories of settings below allow you to call up your own custom reset settings from files saved to the User of Disk drive.

SYSTEM SETUP	Parameters set on the various displays such as the [FUNCTION] → UTILITY and microphone setting display are handled as a single System Setup file. Refer to the separate Oners Manual Data List booklet for details about which parameters belong to the System Setup.
MIDI SETUP	The MIDI settings including the MIDI templates on the User drive are handled as a single file.
USER EFFECT	The User Effect settings including the user effect types, user master EQ types, user compressor types, and user vocal harmony types created via the Mixing Console displays are managed as a single file.
MUSIC FINDER	All the preset and created records of the Music Finder are handled as a single file.

■ MIDI IMPLEMENTATION CHART

YAMAHA [Digital Workstation] Date:01-MAY-2002
Model TYROS MIDI Implementation Chart Version : 1.00

Function...	Transmitted	Recognized	Remarks
Basic Channel Default	1 - 16	1 - 16	
Basic Channel Changed	1 - 16	1 - 16	
Mode Default	3	3	
Mode Messages	x	x	
Mode Altered	**********	x	
Note Number : True voice	0 - 127 **********	0 - 127 0 - 127	
Velocity Note ON	o 9nH,v=1-127	o 9nH,v=1-127	
Velocity Note OFF	x 9nH,v=0	x	
After Touch Key's	x	o	
After Touch Ch's	o	o	
Pitch Bend	o	o 0-24 semi	
Control Change 0,32	o	o	Bank Select
Control Change 1,5,7,10,11	o	o	
Control Change 6,38	o	o	Data Entry
Control Change 64,65,66,67	o	o	
Control Change 71-74	o	o	Sound Controller
Control Change 84	o	o	Portamento Cntrl
Control Change 91,93,94	o	o	Effect Depth
Control Change 96,97	x	o	RPN Inc,Dec
Control Change 98,99	o	o	NRPN LSB,MSB
Control Change 100,101	o	o	RPN LSB,MSB
Control Change 120	x	o	ALL Sound Off
Control Change 121	x	o	Reset All Cntrls
Prog Change : True #	o 0 - 127 **********	o 0 - 127	
System Exclusive	o	o	
Common : Song Pos.	x	x	
Common : Song Sel.	x	x	
Common : Tune	x	x	
System Real Time: Clock	o	o	
System Real Time: Commands	o	o	
Aux Mes-sages: All Sound OFF	x	o(120,126,127)	
Aux Mes-sages: Reset All Cntrls	x	o(121)	
Aux Mes-sages: Local ON/OFF	x	x	
Aux Mes-sages: All Notes OFF	x	o(123-125)	
Aux Mes-sages: Active Sense	o	o	
Aux Mes-sages: Reset	x	x	
Notes:			

Mode 1 : OMNI ON , POLY Mode 2 : OMNI ON , MONO o : Yes
Mode 3 : OMNI OFF, POLY Mode 4 : OMNI OFF, MONO x : No

MIDI DATA FORMAT

Many MIDI messages listed in the MIDI Data Format are expressed in decimal numbers, binary numbers and hexadecimal numbers.
Hexa-decimal numbers may include the letter “H” as a suffix. Also, “n” can freely be defined as any whole number.
To enter data/values, refer to the table below.

Decimal	Hexadecimal	Binary
0	00	0000 0000
1	01	0000 0001
2	02	0000 0010
3	03	0000 0011
4	04	0000 0100
5	05	0000 0101
6	06	0000 0110
7	07	0000 0111
8	08	0000 1000
9	09	0000 1001
10	0A	0000 1010
11	0B	0000 1011
12	0C	0000 1100
13	0D	0000 1101
14	0E	0000 1110
15	0F	0000 1111
16	10	0001 0000
17	11	0001 0001
18	12	0001 0010
19	13	0001 0011
20	14	0001 0100
21	15	0001 0101
22	16	0001 0110
23	17	0001 0111
24	18	0001 1000
25	19	0001 1001
26	1A	0001 1010
27	1B	0001 1011
28	1C	0001 1100
29	1D	0001 1101
30	1E	0001 1110
31	1F	0001 1111

Decimal	Hexadecimal	Binary
32	20	0010 0000
33	21	0010 0001
34	22	0010 0010
35	23	0010 0011
36	24	0010 0100
37	25	0010 0101
38	26	0010 0110
39	27	0010 0111
40	28	0010 1000
41	29	0010 1001
42	2A	0010 1010
43	2B	0010 1011
44	2C	0010 1100
45	2D	0010 1101
46	2E	0010 1110
47	2F	0010 1111
48	30	0011 0000
49	31	0011 0001
50	32	0011 0010
51	33	0011 0011
52	34	0011 0100
53	35	0011 0101
54	36	0011 0110
55	37	0011 0111
56	38	0011 1000
57	39	0011 1001
58	3A	0011 1010
59	3B	0011 1011
60	3C	0011 1100
61	3D	0011 1101
62	3E	0011 1110
63	3F	0011 1111

Decimal	Hexadecimal	Binary
64	40	0100 0000
65	41	0100 0001
66	42	0100 0010
67	43	0100 0011
68	44	0100 0100
69	45	0100 0101
70	46	0100 0110
71	47	0100 0111
72	48	0100 1000
73	49	0100 1001
74	4A	0100 1010
75	4B	0100 1011
76	4C	0100 1100
77	4D	0100 1101
78	4E	0100 1110
79	4F	0100 1111
80	50	0101 0000
81	51	0101 0001
82	52	0101 0010
83	53	0101 0011
84	54	0101 0100
85	55	0101 0101
86	56	0101 0110
87	57	0101 0111
88	58	0101 1000
89	59	0101 1001
90	5A	0101 1010
91	5B	0101 1011
92	5C	0101 1100
93	5D	0101 1101
94	5E	0101 1110
95	5F	0101 1111

Decimal	Hexadecimal	Binary
96	60	0110 0000
97	61	0110 0001
98	62	0110 0010
99	63	0110 0011
100	64	0110 0100
101	65	0110 0101
102	66	0110 0110
103	67	0110 0111
104	68	0110 1000
105	69	0110 1001
106	6A	0110 1010
107	6B	0110 1011
108	6C	0110 1100
109	6D	0110 1101
110	6E	0110 1110
111	6F	0110 1111
112	70	0111 0000
113	71	0111 0001
114	72	0111 0010
115	73	0111 0011
116	74	0111 0100
117	75	0111 0101
118	76	0111 0110
119	77	0111 0111
120	78	0111 1000
121	79	0111 1001
122	7A	0111 1010
123	7B	0111 1011
124	7C	0111 1100
125	7D	0111 1101
126	7E	0111 1110
127	7F	0111 1111

- Except the table above, for example 144-159(decimal)/9nH/10010000-1001 1111(binary) denotes the Note On Message for each channel (1-16). 176-191/BnH/1011 0000-1011 1111 denotes the Control Change Message for each channel (1-16). 192-207/CnH/ 1100 0000-1100 1111 denotes the Program Change Message for each channel (1-16). 240/F0H/1111 0000 denotes the start of a Sys-tem Exclusive Message. 247/F7H/1111 0111 denotes the end of a System Exclusive Message.

- aaH (hexidecimal)/0aaaaaaa (binary) denotes the data address. The address contains High, Mid, and Low.
- bbH/0bbbbbbb denotes the byte count.
- ccH/0ccccccc denotes the check sum.
- ddH/0ddddddd denotes the data/value.

MIDI CHANNEL MESSAGE (1)

										[MIDI]												[Song Creator]	
MIDI Events	Status byte	1st Data byte			2nd Data byte			Voice		MIDI Reception (respond/ignore)					MIDI Transmission (generated data)					PLAY		REC
	Status	Data	(HEX)	Parameter	Data	(HEX)	Parameter	Regular /Organ Voice	Mic/Vocal Harmony	Song	Right1 Right2 Right3 Left	Keyboard	Style	Extra	Right1 Right2 Right3 Left	M.Pad	Style	Song	Upper Lower	PLAY	REW	From panel operations
Key Off [GM1] [GM2]	8nH (n:Channel Number)	kk		Key no. (0-127)	vv		Velocity(0-127)	O	O (Harmony Channel/ Melody Channel)	O	O	O	O	O	X	X	O	O	X	O	X	X
Key On [GM1] [GM2]	9nH (n:Channel Number)	kk		Key no. (0-127)	vv		Key On : vv=1-127 Key Off : vv=0	O	O (Harmony Channel/ Melody Channel)	O	O	O	O	O		O	O	O		O	X	O
Control Change	BnH	0	(00H)	Bank Select MSB [GM2]	0 8 62 63 64 120 121 126 127	(00H) (08H) (3EH) (3FH) (40H) (78H) (79H) (7EH) (7FH)	Normal Mega voice Custom Voice (Drum) Custom Voice (Normal) SFX voice GM2 Rhythm GM2 Normal SFX kit Drum kit	O	X	O	O	O (Right1)	O	O		O			X	O	O	O
		1	(01H)	Modulation [GM1] [GM2]	0-127	(00H...7FH)	Data	O	X	O	O	O (All Keyboard parts)	O	O		O	O	O		O	O	O
		5	(05H)	Portamento Time [GM2]	0-127	(00H...7FH)	Data	O	X	O	O	O (All Keyboard parts)	X	O		O	X	O	X	O	O	O
		6	(06H)	Data Entry MSB [GM2]	0-127	(00H...7FH)	Data	O	O (Harmony Channel/ Melody Channel)	O	O	O (All Keyboard parts)	O	O		O	O	O	X	O	X	O
		7	(07H)	Main Volume [GM1] [GM2]	0-127	(00H...7FH)	Data	O	X	O	O	O (All Keyboard parts)	O	O		O			X	O	O	O
		10	(0AH)	Panpot [GM1] [GM2]	0-127	(00H...7FH)	L64...C...R63	O	X	O	O	O (All Keyboard parts)	O	O		O			X	O	O	O
		11	(0BH)	Expression [GM1] [GM2]	0-127	(00H...7FH)	Data	O	X	O	O	O (All Keyboard parts)	O	O						O	O	O
		32	(20H)	Bank Select LSB [GM2]	0-127	(00H...7FH)	Data	O	X	O	O	O (Right1)	O	O		O			X	O	O	O
		38	(26H)	Data Entry LSB [GM2]	0-127	(00H...7FH)	Data	O	X	O	O	O (All Keyboard parts)	X	O		O	X	O	X	O	X	O
		64	(40H)	Sustain (Damper) [GM1] [GM2]	0-127	(00H...7FH)	Data	O	O (Harmony Channel/ Melody Channel)	O	O	O (All Keyboard parts)	X	O		O	X	O		O	O	O
		65	(41H)	Portamento [GM2]	0-127	(00H...7FH)	0...63, 64...127 (OFF, ON)	O	X	O	O	O (All Keyboard parts)	X	O		O	X	O		O	O	O
		66	(42H)	Sostenuto [GM2]	0-127	(00H...7FH)	0...63, 64...127 (OFF, ON)	O	X	O	O	O (All Keyboard parts)	X	O		O	X	O		O	O	O
		67	(43H)	Soft Pedal [GM2]	0-127	(00H...7FH)	0...63, 64...127 (OFF, ON)	O	X	O	O	O (All Keyboard parts)	X	O		O	X	O		O	O	O
		71	(47H)	Harmonic Content [GM2]	0-127	(00H...7FH)	-64...0...+63	O	X	O	O	O (All Keyboard parts)	O	O		O			X	O	O	O
		72	(48H)	Release Time [GM2]	0-127	(00H...7FH)	-64...0...+63	O	X	O	O	O (All Keyboard parts)	O	O		O	O	O	X	O	O	O
		73	(49H)	Attack Time [GM2]	0-127	(00H...7FH)	-64...0...+63	O	X	O	O	O (All Keyboard parts)	O	O		O	O	O	X	O	O	O
		74	(4AH)	Brightness [GM2]	0-127	(00H...7FH)	-64...0...+63	O	X	O	O	O (All Keyboard parts)	O	O		O			X	O	O	O
		75	(4BH)	Decay Time [GM2]	0-127	(00H...7FH)	-64...0...+63	O	X	O	O	O (All Keyboard parts)	O	O	X	X	X	O	X	O	O	X
		76	(4CH)	Vibrato Rate [GM2]	0-127	(00H...7FH)	-64...0...+63	O	X	O	O	O (All Keyboard parts)	O	O	X	X	X	O	X	O	O	X
		77	(4DH)	Vibrato Depth [GM2]	0-127	(00H...7FH)	-64...0...+63	O	X	O	O	O (All Keyboard parts)	O	O	X	X	X	O	X	O	O	X
		78	(4EH)	Vibrato Delay [GM2]	0-127	(00H...7FH)	-64...0...+63	O	X	O	O	O (All Keyboard parts)	O	O	X	X	X	O	X	O	O	X
		84	(54H)	Portamento Control	0-127	(00H...7FH)	Key no. (0-127)	O	X	O	O	X	O	O	O	O		O	X	O	X	O
		91	(5BH)	Effect1 Depth (Reverb Send Level) [GM2]	0-127	(00H...7FH)	Data	O	X	O	O	O (All Keyboard parts)	O	O					X	O	O	O
		93	(5DH)	Effect3 Depth (Chorus Send Level) [GM2]	0-127	(00H...7FH)	Data	O	X	O	O	O (All Keyboard parts)	O	O					X	O	O	O
		94	(5EH)	Effect4 Depth (Variation Send Level)	0-127	(00H...7FH)	Data	O	X	O	O	O (All Keyboard parts)	O	O	O	O			X	O	O	X Multi Recording

MIDI Events	Status byte		1st Data byte			2nd Data byte			Voice		[MIDI] MIDI Reception (respond/ignore)					MIDI Transmission (generated data)					[Song Creator] PLAY		REC
	Status		Data	(HEX)	Parameter	Data	(HEX)	Parameter	Regular /Organ Voice	Mic/Vocal Harmony	Song	Right1 Right2 Right3 Left	Keyboard	Style	Extra	Right1 Right2 Right3 Left	M.Pad	Style	Song	Upper Lower	PLAY	REW	From panel operations
			96	(60H)	RPN Increment	-	-	The data byte is ignored.	O	O (Harmony Channel/ Melody Channel)	O	O	X	O	O	X	O	X	O	X	O	X	X
			97	(61H)	RPN Decrement	-	-	The data byte is ignored.	O	O (Harmony Channel/ Melody Channel)	O	O	X	O	O	X	O	X	O	X	O	X	X
			98	(62H)	NRPN LSB	0-127	(00H...7FH)	Data	O	O (Harmony Channel/ Melody Channel)	O	O	X	O	O		O	O	O	X	O	O	O
			99	(63H)	NRPN MSB	0-127	(00H...7FH)	Data	O	O (Harmony Channel/ Melody Channel)	O	O	X	O	O		O	O	O	X	O	O	O
			100	(64H)	RPN LSB [GM2]	0-127	(00H...7FH)	Data	O	O (Harmony Channel/ Melody Channel)	O	O	O (All Keyboard parts)	O	O		O			X	O	O	O
			101	(65H)	RPN MSB [GM2]	0-127	(00H...7FH)	Data	O	O (Harmony Channel/ Melody Channel)	O	O	O (All Keyboard parts)	O	O		O			X	O	O	O
Mode Message	BnH	(n:Channel Number)	120	(78H)	All Sound Off [GM2]	0	(00H)	Data	O	X	O	O	O (All Keyboard parts)	O	O	X	O	X	O	X	O	X	X
			121	(79H)	Reset All Controllers [GM1] [GM2]	0	(00H)	Data	O	X	O	X	X	X	X	X	O	X	O	X	O	X	X
			123	(7BH)	All Note Off [GM1] [GM2]	0	(00H)	Data	O	O (Harmony Channel/ Melody Channel)	O	O	O (All Keyboard parts)	O	O	X	O	X	O	X	O	X	X
			124	(7CH)	Omni Off [GM2]	0	(00H)	Data	O	X	O	X	X	X	X	X	O	X	O	X	O	X	X
			125	(7DH)	Omni On [GM2]	0	(00H)	Data	O	X	O	X	X	X	X	X	O	X	O	X	O	X	X
			126	(7EH)	Mono [GM2]	0-16	(00H...10H)	Data	O	X	O	X	X	X	X	X	O	X	O	X	O	X	X
			127	(7FH)	Poly [GM2]	0	(00H)	Data	O	X	O	X	X	X	X	X	O	X	O	X	O	X	X
Program Change [GM1] [GM2]	CnH	(n:Channel Number)	pp	(00H... 7FH)	Voice Number (0-127)	-	-	- O		X	O	O	O (Right1)	O	O		O			X	O	O	O
Channel After Touch [GM1] [GM2]	DnH	(n:Channel Number)	vv	(00H... 7FH)	Data	-	-	- O		X	O	O	O (All Keyboard parts)	X	O		O	X	O		O	X	O
Polyphonic After Touch	AnH	(n:Channel Number)	kk	(00H... 7FH)	Key no. (0-127)	vv	(00H...7FH)	Data	O	X	O	X	X	X	X	X	X	X	O	X	O	X	X
Pitch Bend Change [GM1] [GM2]	EnH	(n:Channel Number)	cc	(00H... 7FH)	LSB	dd	(00H...7FH)	MSB	O	O (Harmony Channel/ Melody Channel)	O	O	O (All Keyboard parts)	O	O		O	O	O		O	O	O
Realtime Message	F8H	MIDI Clock	-	-	-	-	-	-	-	-	O (Received when the Clock is set to MIDI A, MIDI B, USB1, or USB2.)					O (Transmitted when the Clock is set to Internal and the Transmit Clock is set to on.)					-	-	-
	FAH	Start	-	-	-	-	-	-	-	-	O (Received when the Clock is set to MIDI A, MIDI B, USB1, or USB2.)					O (Transmitted when the Transmit Clock is set to on.)					-	-	-
	FBH	Continue	-	-	-	-	-	- -		-	X					X					-	-	-
	FCH	Stop	-	-	-	-	-	-	-	-	O (Received when the Clock is set to MIDI A, MIDI B, USB1, or USB2.)					O (Transmitted when the Transmit Clock is set to on.)					-	-	-
	FEH	Active Sensing [GM2]	-	-	-	-	-	- -		-	O					O					-	-	-
	FFH	System Reset	-	-	-	-	-	- -		-	X					X					-	-	-

: Transmitted via panel operations and keyboard/controller performances.
About Mic/Vocal Harmony column:
The relevant parameters are received by the song part designated by the Effect's Harmony Channel Parameter or Melody Channel Parameter.

[GM1]...GM Leve1 Required Parameter
[GM2]...GM Leve2 Required Parameter

MIDI CHANNEL MESSAGE (2)

NRPN [MIDI] [Song Creator]

NRPN		Data Entry		Parameter	Data Range	Voice		MIDI Reception (respond/ignore)					MIDI Transmission (generated data)					PLAY		REC
MSB	LSB	MSB	LSB			Regular/ Organ Voice	Mic/Vocal Harmony	Song	Right1 Right2 Right3 Left	Keyboard	Style	Extra	Right1 Right2 Right3 Left	M.Pad	Style	Song	Upper Lower	PLAY	REW	From panel operations
01H	08H	mmH	--	Vibrato Rate	mm : 00H-40H-7FH (-64...0...+63)	O	O (Harmony Channel/ Melody Channel)	O	O	X	O	O		O	O	O	X	O	O	O
01H	09H	mmH	--	Vibrato Depth	mm : 00H-40H-7FH (-64...0...+63)	O	O (Harmony Channel/ Melody Channel)	O	O	X	O	O		O	O	O	X	O	O	O
01H	0AH	mmH	--	Vibrato Delay	mm : 00H-40H-7FH (-64...0...+63)	O	O (Harmony Channel/ Melody Channel)	O	O	X	O	O		O	O	O	X	O	O	O
01H	20H	mmH	--	Low Pass Filter Cutoff Frequency	mm : 00H-40H-7FH (-64...0...+63)	O	X	O	X	X	O	X	X	O	X	O	X	O	O	X
01H	21H	mmH	--	Low Pass Filter Resonance	mm : 00H-40H-7FH (-64...0...+63)	O	X	O	X	X	O	X	X	O	X	O	X	O	O	X
01H	30H	mmH	--	EQ BASS	mm : 00H-40H-7FH (-64...0...+63)	O	X	O	X	X	O	X	X	X	X	O	X	O	O	X
01H	31H	mmH	--	EQ TREBLE	mm : 00H-40H-7FH (-64...0...+63)	O	X	O	X	X	O	X	X	X	X	O	X	O	O	X
01H	34H	mmH	--	EQ BASS Frequency	mm : 04H-28H (32...2.0k[Hz])	O	X	O	X	X	X	X	X	X	X	O	X	O	O	X
01H	35H	mmH	--	EQ TREBLE Frequency	mm : 1CH-3AH (500...16.0k[Hz])	O	X	O	X	X	X	X	X	X	X	O	X	O	O	X
01H	63H	mmH	--	EG Attack Time	mm : 00H-40H-7FH (-64...0...+63)	O	X	O	X	X	O	X	X	O	X	O	X	O	O	X
01H	64H	mmH	--	EG Decay Time	mm : 00H-40H-7FH (-64...0...+63)	O	X	O	O	X	O	O		O	O	O	X	O	O	O
01H	66H	mmH	--	EG Release	mm : 00H-40H-7FH (-64...0...+63)	O	X	O	X	X	O	X	X	O	X	O	X	O	O	X
14H	rrH	mmH	--	Drum Low Pass Filter Cutoff Frequency	rr : drum instrument note number mm : 00H-40H-7FH (-64...0...+63)	O (Drum Only)	X	O	X	X	X	X	X	X	O	O	X	O	X	X
15H	rrH	mmH	--	Drum Low Pass Filter Resonance	rr : drum instrument note number mm : 00H-40H-7FH (-64...0...+63)		X	O	X	X	X	X	X	X	O	O	X	O	X	X
16H	rrH	mmH	--	Drum EG Attack Rate	rr : drum instrument note number mm : 00H-40H-7FH (-64...0...+63)		X	O	X	X	X	X	X	X	O	O	X	O	X	X
17H	rrH	mmH	--	Drum EG Decay Rate	rr : drum instrument note number mm : 00H-40H-7FH (-64...0...+63)		X	O	X	X	X	X	X	X	O	O	X	O	X	X
18H	rrH	mmH	--	Drum Pitch Coarse	rr : drum instrument note number mm : 00H-40H-7FH (-64...0...+63)		X	O	X	X	X	X	X	X	O	O	X	O	X	X
19H	rrH	mmH	--	Drum Pitch Fine	rr : drum instrument note number mm : 00H-40H-7FH (-64...0...+63)		X	O	X	X	X	X	X	X	O	O	X	O	X	X
1AH	rrH	mmH	--	Drum Level	rr : drum instrument note number mm : 00H-7FH (0...127)		X	O	X	X	X	X	X	X	O	O	X	O	X	X
1CH	rrH	mmH	--	Drum Pan	rr : drum instrument note number mm : 00H, 01H-40H-7FH (RND, L63...C...R63)		X	O	X	X	X	X	X	X	O	O	X	O	X	X
1DH	rrH	mmH	--	Drum Reverb Send Level	rr : drum instrument note number mm : 00H-7FH (0...127)		X	O	X	X	X	X	X	X	O	O	X	O	X	X
1EH	rrH	mmH	--	Drum Chorus Send Level	rr : drum instrument note number mm : 00H-7FH (0...127)		X	O	X	X	X	X	X	X	O	O	X	O	X	X
1FH	rrH	mmH	--	Drum Variation Send Level	rr : drum instrument note number mm : 00H-7FH (0...127) (Variation Connection= SYSTEM) mm : 00H, 01H-7FH (OFF, ON) (Variation Connection= INSERTION)		X	O	X	X	X	X	X	X	O	O	X	O	X	X
30H	rrH	mmH	--	Drum EQ Bass Gain	rr : drum instrument note number mm : 00H-7FH (0...127)	X	X	X	X	X	X	X	X	X	X	X	X	X	X	X
31H	rrH	mmH	--	Drum EQ Treble Gain	rr : drum instrument note number mm : 00H-7FH (0...127)	X	X	X	X	X	X	X	X	X	X	X	X	X	X	X
34H	rrH	mmH	--	Drum EQ Bass Frequency	rr : drum instrument note number mm : 04H-28H (32...2.0[Hz])	X	X	X	X	X	X	X	X	X	X	X	X	X	X	X
35H	rrH	mmH	--	Drum EQ Treble Frequency	rr : drum instrument note number mm : 1CH-3AH (500...16.0[Hz])	X	X	X	X	X	X	X	X	X	X	X	X	X	X	X

: Transmitted via panel operations and keyboard/controller performances.
NRPN MSB: 14H-1FH (for drums) message is accepted as long as the channel is set with a drum voice.
Data Entry LSB: Ignored.

NRPN (VocalHarmony)

NRPN		Data Entry		Parameter	Data Range	Voice		[MIDI] MIDI Reception (respond/ignore)					MIDI Transmission (generated data)					[Song Creator] PLAY		REC
MSB	LSB	MSB	LSB			Regular/ Organ Voice	Mic/Vocal Harmony	Song	Right1 Right2 Right3 Left	Keyboard	Style	Extra	Right1 Right2 Right3 Left	M.Pad	Style	Song	Upper Lower	PLAY	REW	From panel operations
00H	00H	mmH	--	Harmony Mute	mm : 00H-3FH, 40H-7FH (Off, On)	X	O (Harmony Channel)	X	X	X	X	X	X	X	X	O	X	O	X	X
01H	1AH	mmH	--	Detune Modulation	mm : 00H-7FH (0...127)	X	O (Harmony Channel)	X	X	X	X	X	X	X	X	O	X	O	X	X
02H	10H	mmH	--	Harmony1 Volume	mm : 00H-7FH (0...127)	X	O (Harmony Channel)	X	X	X	X	X	X	X	X		X	O	X	X
02H	11H	mmH	--	Harmony2 Volume	mm : 00H-7FH (0...127)	X	O (Harmony Channel)	X	X	X	X	X	X	X	X		X	O	X	X
02H	12H	mmH	--	Harmony3 Volume	mm : 00H-7FH (0...127)	X	O (Harmony Channel)	X	X	X	X	X	X	X	X		X	O	X	X
02H	20H	mmH	--	Harmony1 Pan	mm : 00H, 01H-40H-7FH (RND, L63...C...R63)	X	O (Harmony Channel)	X	X	X	X	X	X	X	X		X	O	X	X
02H	21H	mmH	--	Harmony2 Pan	mm : 00H, 01H-40H-7FH (RND, L63...C...R63)	X	O (Harmony Channel)	X	X	X	X	X	X	X	X		X	O	X	X
02H	22H	mmH	--	Harmony3 Pan	mm : 00H, 01H-40H-7FH (RND, L63...C...R63)	X	O (Harmony Channel)	X	X	X	X	X	X	X	X		X	O	X	X
02H	30H	mmH	--	Harmony1 Detune	mm : 00H-40H-7FH (-64...0...+63)	X	O (Harmony Channel)	X	X	X	X	X	X	X	X		X	O	X	X
02H	31H	mmH	--	Harmony2 Detune	mm : 00H-40H-7FH (-64...0...+63)	X	O (Harmony Channel)	X	X	X	X	X	X	X	X		X	O	X	X
02H	32H	mmH	--	Harmony3 Detune	mm : 00H-40H-7FH (-64...0...+63)	X	O (Harmony Channel)	X	X	X	X	X	X	X	X		X	O	X	X

: Transmitted via panel operations and keyboard/controller performances.
Data Entry LSB: Ignored.

RPN

RPN		Data Entry		Parameter	Data Range	Voice		[MIDI] MIDI Reception (respond/ignore)					MIDI Transmission (generated data)					[Song Creator] PLAY		REC
MSB	LSB	MSB	LSB			Regular/ Organ Voice	Mic/Vocal Harmony	Song	Right1 Right2 Right3m Left	Keyboard	Style	Extra	Right1 Right2 Right3 Left	M.Pad	Style	Song	Upper Lower	PLAY	REW	From panel operations
00H	00H	mmH	--	Pitch Bend Sensitivity [GM1][GM2]	mm : 00H-18H (0...+24 [semitones])	O	O (Harmony Channel/ Melody Channel)	O	O	O (All Keyboard parts)	O	O		O	O	O	X	O	O	O
00H	01H	mmH	llH	Fine Tune [GM1][GM2]	mm ll : 00H 00H -100[cent] ... mm ll : 40H 00H 0[cent] ... mm ll : 7FH 7FH 100[cent]	O	X	O	O	O (All Keyboard parts)	O	O		O	O	O	X	O	O	O
00H	02H	mmH	--	Coarse Tune [GM1][GM2]	mm : 28H-40H-58H (-24...0...+24[semitones])	O	X	O	O	O (All Keyboard parts)	O	O	X	O	O	O	X	O	O	X
00H	05H	mmH	llH	Modulation Sensitivity [GM2]	mm : Specified in semitone steps ll : Specified in 100/128 cent steps	O	X	O	X	X	X	X	X	X	X	O	X	O	X	X
7FH	7FH	--	--	Null [GM2]	-	O	O	O	O	O (All Keyboard parts)	O	O	X	O	O	O	X	O	X	X

: Transmitted via panel operations and keyboard/controller performances.
About Mic/Vocal Harmony column:
The relevant parameters are received by the song part designated by the Effect's Harmony Channel Parameter or Melody Channel Parameter.

[GM1]...GM Leve1 Required Parameter
[GM2]...GM Leve2 Required Parameter

MIDI PARAMETER CHANGE TABLE

* Not received when Receive System Exclusive Message Parameters is set to off.
* Not transmitted when Transmit System Exclusive Message Parmeters is set to off.

MIDI Parameter Change table (XG SYSTEM)

Address (H)			Size (H)	Data (H)	Parameter	Description	XG Default (H)	[MIDI] Voice: Regular/ Organ Voice	Voice: Mic/ Vocal Harmony	MIDI Reception (respond/ignore): Song	Right1 Right2 Right3 Left	Keyboard	Style	Extra	MIDI Transmission (generated data): Right1 Right2 Right3 Left	M.Pad	Style	Song	Upper Lower	[Song Creator] PLAY: PLAY	PLAY: REW	REC: From panel operations
00	00	00	4	00-0F	MASTER TUNE	-102.4...0...+102.3[cent]	*Panel setting value	O	O	O										O	X	X
		01		00-0F		1st bit3-0 bit15-12																
		02		00-0F		2nd bit3-0 bit11-8																
		03		00-0F		3rd bit3-0 bit7-4																
						4th bit3-0 bit3-0																
		04	1	00-7F	MASTER VOLUME	0...127	7F	O	X	O (Available for extra parts of a song)					O					O	O	X
		05	1	00-7F	MASTER ATTENUATOR	0...127	00	X	X	X					X					X	X	X
		06	1	28-58	TRANSPOSE	-24...0...+24 [semitones]	40	O	O	O (Available for extra parts of a song)					O					O	O	X
		7D	1	N	DRUM SETUP RESET	N:Drum setup number	-	O (Drum Only)	X	O (Available for extra parts of a song)					O					O	X	X
		7E	1	00	XG SYSTEM ON	00=XG system ON	-	O	X	O (Available for extra parts of a song)					O					O	X	O
		7F	1	00	ALL PARAMETER RESET	00=ON	-	O	X	O (Available for extra parts of a song)					O					O	X	X

TOTAL SIZE 07

: Transmitted via panel operations

MIDI Parameter Change table (SYSTEM INFORMATION)

Address (H)			Size (H)	Data (H)	Parameter	Description	[MIDI] Voice: Regular/ Organ Voice	Voice: Mic/Vocal Harmony	MIDI Reception (respond/ignore): Song	Right1 Right2 Right3 Left	Keyboard	Style	Extra	MIDI Transmission (generated data): Right1 Right2 Right3 Left	M.Pad	Style	Song	Upper Lower	[Song Creator] PLAY: PLAY	PLAY: REW	REC: From panel operations
01	00	00	E	20-7F	Model Name 1	32...127(ASCII CHATACTER)	-		-					O (Available only when receiving requests via MIDI)					-	-	-
		...		...	...	...															
		0D		20-7F	Model Name 14	32...127(ASCII CHATACTER)															
		0E	1		NOT USED																
		0F	1		NOT USED																

TOTAL SIZE 10

Transmitted in response to Dump Request. Not received.

MIDI Parameter Change table (EFFECT1)

Address (H)			Size (H)	Data (H)	Parameter	Description	XG Default (H)	[MIDI] Voice: Regular/ Organ Voice	Voice: Mic/Vocal Harmony	MIDI Reception (respond/ignore): Song	Right1 Right2 Right3 Left	Keyboard	Style	Extra	MIDI Transmission (generated data): Right1 Right2 Right3 Left	M.Pad	Style	Song	Upper	[Song Creator] PLAY: PLAY	PLAY: REW	REC: From panel operations
02	01	00	2	00-7F	REVERB TYPE MSB	Refer to Effect Parameter List	01(=HALL1)	O	O	O										O	O	O
				00-7F	REVERB TYPE LSB	Refer to Effect Parameter List	00															
		02	1	00-7F	REVERB PARAMETER 1	Refer to Effect Parameter List	Depends on Reverb Type	O	O	O										O	O	O
		03	1	00-7F	REVERB PARAMETER 2	Refer to Effect Parameter List	Depends on Reverb Type	O	O	O										O	O	O
		04	1	00-7F	REVERB PARAMETER 3	Refer to Effect Parameter List	Depends on Reverb Type	O	O	O										O	O	O
		05	1	00-7F	REVERB PARAMETER 4	Refer to Effect Parameter List	Depends on Reverb Type	O	O	O										O	O	O
		06	1	00-7F	REVERB PARAMETER 5	Refer to Effect Parameter List	Depends on Reverb Type	O	O	O										O	O	O
		07	1	00-7F	REVERB PARAMETER 6	Refer to Effect Parameter List	Depends on Reverb Type	O	O	O										O	O	O
		08	1	00-7F	REVERB PARAMETER 7	Refer to Effect Parameter List	Depends on Reverb Type	O	O	O										O	O	O
		09	1	00-7F	REVERB PARAMETER 8	Refer to Effect Parameter List	Depends on Reverb Type	O	O	O										O	O	O
		0A	1	00-7F	REVERB PARAMETER 9	Refer to Effect Parameter List	Depends on Reverb Type	O	O	O										O	O	O
		0B	1	00-7F	REVERB PARAMETER 10	Refer to Effect Parameter List	Depends on Reverb Type	O	O	O										O	O	O
		0C	1	00-7F	REVERB RETURN	- dB...0dB...+6dB (0...64...127)	40	O	O	O										O	O	O
		0D	1	01-7F	REVERB PAN	L63...C...R63	40	O	O	O					O					O	O	X

TOTAL SIZE 0E

02	01	10	1	00-7F	REVERB PARAMETER 11	Refer to Effect Parameter List	Depends on Reverb Type	O	O	O										O	O	O
		11	1	00-7F	REVERB PARAMETER 12	Refer to Effect Parameter List	Depends on Reverb Type	O	O	O										O	O	O
		12	1	00-7F	REVERB PARAMETER 13	Refer to Effect Parameter List	Depends on Reverb Type	O	O	O										O	O	O
		13	1	00-7F	REVERB PARAMETER 14	Refer to Effect Parameter List	Depends on Reverb Type	O	O	O										O	O	O
		14	1	00-7F	REVERB PARAMETER 15	Refer to Effect Parameter List	Depends on Reverb Type	O	O	O										O	O	O
		15	1	00-7F	REVERB PARAMETER 16	Refer to Effect Parameter List	Depends on Reverb Type	O	O	O										O	O	O

TOTAL SIZE 6

: Transmitted via panel operations

Address (H)			Size (H)	Data (H)	Parameter	Description	XG Default (H)	[MIDI] Voice: Regular/ Organ Voice	Voice: Mic/Vocal Harmony	MIDI Reception (respond/ignore): Song	Right1 Right2 Right3 Left	Keyboard	Style	Extra	MIDI Transmission (generated data): Right1 Right2 Right3 Left	M.Pad	Style	Song	Upper Lower	[Song Creator] PLAY: PLAY	PLAY: REW	REC: From panel operations
02	01	20	2	00-7F 00-7F	CHORUS TYPE MSB CHORUS TYPE LSB	Refer to Effect Parameter List Refer to Effect Parameter List	41(=CHORUS1) 00	O	O			O								O	O	O
		22	1	00-7F	CHORUS PARAMETER 1	Refer to Effect Parameter List	Depends on Chorus Type	O	O			O								O	O	O
		23	1	00-7F	CHORUS PARAMETER 2	Refer to Effect Parameter List	Depends on Chorus Type	O	O			O								O	O	O
		24	1	00-7F	CHORUS PARAMETER 3	Refer to Effect Parameter List	Depends on Chorus Type	O	O			O								O	O	O
		25	1	00-7F	CHORUS PARAMETER 4	Refer to Effect Parameter List	Depends on Chorus Type	O	O			O								O	O	O
		26	1	00-7F	CHORUS PARAMETER 5	Refer to Effect Parameter List	Depends on Chorus Type	O	O			O								O	O	O
		27	1	00-7F	CHORUS PARAMETER 6	Refer to Effect Parameter List	Depends on Chorus Type	O	O			O								O	O	O
		28	1	00-7F	CHORUS PARAMETER 7	Refer to Effect Parameter List	Depends on Chorus Type	O	O			O								O	O	O
		29	1	00-7F	CHORUS PARAMETER 8	Refer to Effect Parameter List	Depends on Chorus Type	O	O			O								O	O	O
		2A	1	00-7F	CHORUS PARAMETER 9	Refer to Effect Parameter List	Depends on Chorus Type	O	O			O								O	O	O
		2B	1	00-7F	CHORUS PARAMETER 10	Refer to Effect Parameter List	Depends on Chorus Type	O	O			O								O	O	O
		2C	1	00-7F	CHORUS RETURN	- dB...0dB...+6dB (0...64...127)	40	O	O			O								O	O	O
		2D	1	01-7F	CHORUS PAN	L63...C...R63	40	O	O			O						O		O	O	X
		2E	1	00-7F	SEND CHORUS TO REVERB	- dB...0dB...+6dB (0...64...127)	00	O	O			O						O		O	O	X

TOTAL SIZE 0F

02	01	30	1	00-7F	CHORUS PARAMETER 11	Refer to Effect Parameter List	Depends on Chorus Type	O	O			O								O	O	O
		31	1	00-7F	CHORUS PARAMETER 12	Refer to Effect Parameter List	Depends on Chorus Type	O	O			O								O	O	O
		32	1	00-7F	CHORUS PARAMETER 13	Refer to Effect Parameter List	Depends on Chorus Type	O	O			O								O	O	O
		33	1	00-7F	CHORUS PARAMETER 14	Refer to Effect Parameter List	Depends on Chorus Type	O	O			O								O	O	O
		34	1	00-7F	CHORUS PARAMETER 15	Refer to Effect Parameter List	Depends on Chorus Type	O	O			O								O	O	O
		35	1	00-7F	CHORUS PARAMETER 16	Refer to Effect Parameter List	Depends on Chorus Type	O	O			O								O	O	O

TOTAL SIZE 06

Address (H)			Size (H)	Data (H)	Parameter	Description	XG Default (H)	[MIDI] Voice: Regular/ Organ Voice	Voice: Mic/Vocal Harmony	MIDI Reception (respond/ignore): Song	Right1 Right2 Right3 Left	Keyboard	Style	Extra	MIDI Transmission (generated data): Right1 Right2 Right3 Left	M.Pad	Style	Song	Upper Lower	[Song Creator] PLAY: PLAY	PLAY: REW	REC: From panel operations
02	01	40	2	00-7F 00-7F	VARIATION TYPE MSB VARIATION TYPE LSB	Refer to Effect Parameter List Refer to Effect Parameter List	05(=DELAY L,C,R) 00	O	O			O								O	O	O
		42	2	00-7F 00-7F	VARIATION PARAMETER 1 MSB VARIATION PARAMETER 1 LSB	Refer to Effect Parameter List Refer to Effect Parameter List	Depends on Variation Type	O	O			O								O	O	O
		44	2	00-7F 00-7F	VARIATION PARAMETER 2 MSB VARIATION PARAMETER 2 LSB	Refer to Effect Parameter List Refer to Effect Parameter List	Depends on Variation Type	O	O			O								O	O	O
		46	2	00-7F 00-7F	VARIATION PARAMETER 3 MSB VARIATION PARAMETER 3 LSB	Refer to Effect Parameter List Refer to Effect Parameter List	Depends on Variation Type	O	O			O								O	O	O
		48	2	00-7F 00-7F	VARIATION PARAMETER 4 MSB VARIATION PARAMETER 4 LSB	Refer to Effect Parameter List Refer to Effect Parameter List	Depends on Variation Type	O	O			O								O	O	O
		4A	2	00-7F 00-7F	VARIATION PARAMETER 5 MSB VARIATION PARAMETER 5 LSB	Refer to Effect Parameter List Refer to Effect Parameter List	Depends on Variation Type	O	O			O								O	O	O
		4C	2	00-7F 00-7F	VARIATION PARAMETER 6 MSB VARIATION PARAMETER 6 LSB	Refer to Effect Parameter List Refer to Effect Parameter List	Depends on Variation Type	O	O			O								O	O	O
		4E	2	00-7F 00-7F	VARIATION PARAMETER 7 MSB VARIATION PARAMETER 7 LSB	Refer to Effect Parameter List Refer to Effect Parameter List	Depends on Variation Type	O	O			O								O	O	O
		50	2	00-7F 00-7F	VARIATION PARAMETER 8 MSB VARIATION PARAMETER 8 LSB	Refer to Effect Parameter List Refer to Effect Parameter List	Depends on Variation Type	O	O			O								O	O	O
		52	2	00-7F 00-7F	VARIATION PARAMETER 9 MSB VARIATION PARAMETER 9 LSB	Refer to Effect Parameter List Refer to Effect Parameter List	Depends on Variation Type	O	O			O								O	O	O
		54	2	00-7F 00-7F	VARIATION PARAMETER 10 MSB VARIATION PARAMETER 10 LSB	Refer to Effect Parameter List Refer to Effect Parameter List	Depends on Variation Type	O	O			O								O	O	O
		56	1	00-7F	VARIATION RETURN	- dB...0dB...+6dB (0...64...127)	40	O	O			O								O	O	O
		57	1	01-7F	VARIATION PAN	L63...C...R63	40	O	O			O						O		O	O	X
		58	1	00-7F	SEND VARIATION TO REVERB	- dB...0dB...+6dB (0...64...127)	00	O	O			O						O		O	O	X
		59	1	00-7F	SEND VARIATION TO CHORUS	- dB...0dB...+6dB (0...64...127)	00	O	O			O						O		O	O	X
		5A	1	00-01	VARIATION CONNECTION	INSERTION, SYSTEM	00	O	O			O								O	O	O
		5B	1	00-7F	VARIATION PART NUMBER	Reception : Part1...16(0...15) Transmission : Part1...16(0...15) AD(64) OFF(127)	7F	O	O			O								O	O	O
		5C	1	00-7F	MW VARIATION CONTROL DEPTH	-64...0...+63	40	O	O			O						O		O	O	X
		5D	1	00-7F	BEND VARIATION CONTROL DEPTH	-64...0...+63	40	O	O			O						O		O	O	X
		5E	1	00-7F	CAT VARIATION CONTROL DEPTH	-64...0...+63	40	O	O			O						O		O	O	X
		5F	1	00-7F	AC1 VARIATION CONTROL DEPTH	-64...0...+63	40	O	O			O						O		O	O	X
		60	1	00-7F	AC2 VARIATION CONTROL DEPTH	-64...0...+63	40	O	O			O						O		O	O	X

TOTAL SIZE 21

Address (H)			Size (H)	Data (H)	Parameter	Description	XG Default (H)	[MIDI] Voice: Regular/ Organ Voice	Voice: Mic/Vocal Harmony	MIDI Reception (respond/ignore): Song	Right1 Right2 Right3 Left	Keyboard	Style	Extra	MIDI Transmission (generated data): Right1 Right2 Right3 Left	M.Pad	Style	Song	Upper Lower	[Song Creator] PLAY: PLAY	PLAY: REW	REC: From panel operations
02	01	70	1	00-7F	VARIATION PARAMETER 11	Refer to Effect Parameter List	Depends on Variation Type	O	O	O										O	O	O
		71	1	00-7F	VARIATION PARAMETER 12	Refer to Effect Parameter List	Depends on Variation Type	O	O	O										O	O	O
		72	1	00-7F	VARIATION PARAMETER 13	Refer to Effect Parameter List	Depends on Variation Type	O	O	O										O	O	O
		73	1	00-7F	VARIATION PARAMETER 14	Refer to Effect Parameter List	Depends on Variation Type	O	O	O										O	O	O
		74	1	00-7F	VARIATION PARAMETER 15	Refer to Effect Parameter List	Depends on Variation Type	O	O	O										O	O	O
		75	1	00-7F	VARIATION PARAMETER 16	Refer to Effect Parameter List	Depends on Variation Type	O	O	O										O	O	O

TOTAL SIZE 06

: Transmitted via panel operations

MIDI Parameter Change table (MULTI EQ)

Address (H)			Size (H)	Data (H)	Parameter	Description	* The MULTI EQ Parameter cannot be reset to its factory setting with XG SYSTEM ON.	[MIDI] Voice: Regular/ Organ Voice	Voice: Mic/Vocal Harmony	MIDI Reception (respond/ ignore): Song	Right1 Right2 Right3 Left	Keyboard	Style	Extra	MIDI Transmission (generated data): Right1 Right2 Right3 Left	M.Pad	Style	Song	Upper Lower	[Song Creator] PLAY: PLAY	PLAY: REW	REC: From panel operations
02	40	00	1	00-04	EQ TYPE	flat, jazz, pops, rock, classic		O	O	O					O					O	X	X
		01	1	34-4C	EQ GAIN1	-12...0...+12[dB]		O	O	O										O	X	X
		02	1	04-28	EQ FREQUENCY1	32...2.0k[Hz]		O	O	O										O	X	X
		03	1	01-78	EQ Q1	0.1...12.0		O	O	O										O	X	X
		04	1	00-01	EQ SHAPE1	shelving, peaking		O	O	O					O					O	X	X
		05	1	34-4C	EQ GAIN2	-12...0...+12[dB]		O	O	O										O	X	X
		06	1	0E-36	EQ FREQUENCY2	100...10.0k[Hz]		O	O	O										O	X	X
		07	1	01-78	EQ Q2	0.1...12.0		O	O	O										O	X	X
		08	1		NOT USED			-	-	-					-					-	-	-
		09	1	34-4C	EQ GAIN3	-12...0...+12[dB]		O	O	O										O	X	X
		0A	1	0E-36	EQ FREQUENCY3	100...10.0k[Hz]		O	O	O										O	X	X
		0B	1	01-78	EQ Q3	0.1...12.0		O	O	O										O	X	X
		0C	1		NOT USED			-	-	-					-					-	-	-
		0D	1	34-4C	EQ GAIN4	-12...0...+12[dB]		O	O	O										O	X	X
		0E	1	0E-36	EQ FREQUENCY4	100...10.0k[Hz]		O	O	O										O	X	X
		0F	1	01-78	EQ Q4	0.1...12.0		O	O	O										O	X	X
		10	1		NOT USED			-	-	-					-					-	-	-
		11	1	34-4C	EQ GAIN5	-12...0...+12[dB]		O	O	O										O	X	X
		12	1	1C-3A	EQ FREQUENCY5	0.5k...16.0k[Hz]		O	O	O										O	X	X
		13	1	01-78	EQ Q5	0.1...12.0		O	O	O										O	X	X
		14	1	00-01	EQ SHAPE5	shelving, peaking		O	O	O					O					O	X	X

TOTAL SIZE 15

: Transmitted via panel operations

MIDI Parameter Change table (EFFECT2)

Address (H)			Size (H)	Data (H)	Parameter	Description	* The EFFECT2 Parameter cannot be reset to its factory setting with XG SYSTEM ON.	[MIDI] Voice: Regular/ Organ Voice	Voice: Mic/Vocal Harmony	MIDI Reception (respond/ ignore): Song	Right1 Right2 Right3 Left	Keyboard	Style	Extra	MIDI Transmission (generated data): Right1 Right2 Right3 Left	M.Pad	Style	Song	Upper Lower	[Song Creator] PLAY: PLAY	PLAY: REW	REC: From panel operations
03	n	00	2	00-7F 00-7F	INSERTION EFFECT TYPE MSB INSERTION EFFECT TYPE LSB	Refer to Effect Parameter List Refer to Effect Parameter List		O	O	O										O	O	O
		02	1	00-7F	INSERTION EFFECT PARAMETER 1	Refer to Effect Parameter List		O	O	O										O	O	O
		03	1	00-7F	INSERTION EFFECT PARAMETER 2	Refer to Effect Parameter List		O	O	O										O	O	O
		04	1	00-7F	INSERTION EFFECT PARAMETER 3	Refer to Effect Parameter List		O	O	O										O	O	O
		05	1	00-7F	INSERTION EFFECT PARAMETER 4	Refer to Effect Parameter List		O	O	O										O	O	O
		06	1	00-7F	INSERTION EFFECT PARAMETER 5	Refer to Effect Parameter List		O	O	O										O	O	O
		07	1	00-7F	INSERTION EFFECT PARAMETER 6	Refer to Effect Parameter List		O	O	O										O	O	O
		08	1	00-7F	INSERTION EFFECT PARAMETER 7	Refer to Effect Parameter List		O	O	O										O	O	O
		09	1	00-7F	INSERTION EFFECT PARAMETER 8	Refer to Effect Parameter List		O	O	O										O	O	O
		0A	1	00-7F	INSERTION EFFECT PARAMETER 9	Refer to Effect Parameter List		O	O	O										O	O	O
		0B	1	00-7F	INSERTION EFFECT PARAMETER 10	Refer to Effect Parameter List		O	O	O										O	O	O
		0C	1	00-7F	INSERTION EFFECT PART NUMBER	Reception : Part1...16(0...15) Transmission : Part1...16(0...15) AD(64) OFF(127)		O	O	O										O	O	O
		0D	1	00-7F	MW INSERTION CONTROL DEPTH	-64...0...+63		O	O	O					O					O	O	X
		0E	1	00-7F	BEND INSERTION CONTROL DEPTH	-64...0...+63		O	O	O					O					O	O	X
		0F	1	00-7F	CAT INSERTION CONTROL DEPTH	-64...0...+63		O	O	O					O					O	O	X
		10	1	00-7F	AC1 INSERTION CONTROL DEPTH	-64...0...+63		O	O	O					O					O	O	X
		11	1	00-7F	AC2 INSERTION CONTROL DEPTH	-64...0...+63		O	O	O					O					O	O	X

TOTAL SIZE 12

Address (H)			Size (H)	Data (H)	Parameter	Description	* The EFFECT2 Parameter cannot be reset to its factory setting with XG SYSTEM ON.	[MIDI] Voice: Regular/ Organ Voice	Voice: Mic/Vocal Harmony	MIDI Reception (respond/ignore): Song	Right1 Right2 Right3 Left	Keyboard	Style	Extra	MIDI Transmission (generated data): Right1 Right2 Right3 Left	M.Pad	Style	Song	Upper Lower	[Song Creator] PLAY: PLAY	PLAY: REW	REC: From panel operations
		20	1	00-7F	INSERTION EFFECT PARAMETER 11	Refer to Effect Parameter List		O	O			O								O	O	O
		21	1	00-7F	INSERTION EFFECT PARAMETER 12	Refer to Effect Parameter List		O	O			O								O	O	O
		22	1	00-7F	INSERTION EFFECT PARAMETER 13	Refer to Effect Parameter List		O	O			O								O	O	O
		23	1	00-7F	INSERTION EFFECT PARAMETER 14	Refer to Effect Parameter List		O	O			O								O	O	O
		24	1	00-7F	INSERTION EFFECT PARAMETER 15	Refer to Effect Parameter List		O	O			O								O	O	O
		25	1	00-7F	INSERTION EFFECT PARAMETER 16	Refer to Effect Parameter List		O	O			O								O	O	O

TOTAL SIZE 6

		30	2	00-7F 00-7F	INSERTION EFFECT PARAMETER 1 MSB INSERTION EFFECT PARAMETER 1 LSB	Refer to Effect Parameter List Refer to Effect Parameter List		O	O			O								O	O	O
		32	2	00-7F 00-7F	INSERTION EFFECT PARAMETER 2 MSB INSERTION EFFECT PARAMETER 2 LSB	Refer to Effect Parameter List Refer to Effect Parameter List		O	O			O								O	O	O
		34	2	00-7F 00-7F	INSERTION EFFECT PARAMETER 3 MSB INSERTION EFFECT PARAMETER 3 LSB	Refer to Effect Parameter List Refer to Effect Parameter List		O	O			O								O	O	O
		36	2	00-7F 00-7F	INSERTION EFFECT PARAMETER 4 MSB INSERTION EFFECT PARAMETER 4 LSB	Refer to Effect Parameter List Refer to Effect Parameter List		O	O			O								O	O	O
		38	2	00-7F 00-7F	INSERTION EFFECT PARAMETER 5 MSB INSERTION EFFECT PARAMETER 5 LSB	Refer to Effect Parameter List Refer to Effect Parameter List		O	O			O								O	O	O
		3A	2	00-7F 00-7F	INSERTION EFFECT PARAMETER 6 MSB INSERTION EFFECT PARAMETER 6 LSB	Refer to Effect Parameter List Refer to Effect Parameter List		O	O			O								O	O	O
		3C	2	00-7F 00-7F	INSERTION EFFECT PARAMETER 7 MSB INSERTION EFFECT PARAMETER 7 LSB	Refer to Effect Parameter List Refer to Effect Parameter List		O	O			O								O	O	O
		3E	2	00-7F 00-7F	INSERTION EFFECT PARAMETER 8 MSB INSERTION EFFECT PARAMETER 8 LSB	Refer to Effect Parameter List Refer to Effect Parameter List		O	O			O								O	O	O
		40	2	00-7F 00-7F	INSERTION EFFECT PARAMETER 9 MSB INSERTION EFFECT PARAMETER 9 LSB	Refer to Effect Parameter List Refer to Effect Parameter List		O	O			O								O	O	O
		42	2	00-7F 00-7F	INSERTION EFFECT PARAMETER 10 MSB INSERTION EFFECT PARAMETER 10 LSB	Refer to Effect Parameter List Refer to Effect Parameter List		O	O			O								O	O	O

TOTAL SIZE 14

: Transmitted via panel operations

The second byte of the address is considered as an Insertion effect number.
n : insertion effect number

For effect types that do not require MSB, the Parameters for Address 02-0B will be received and the Parameters for Address 30-42 will not be received.
For effect types that require MSB, the Parameters for Address 30-42 will be received and the Parameters for Address 02-0B will not be received.
When Bulk Dumps that include Effect Type data are transmitted, the Parameters for Address 02-0B will always be transmitted. But, effects that require MSB, when the bulk dump is received the Parameters for Address 02-0B will not be received.

MIDI Parameter Change table (SPECIAL EFFECT)

Address (H)			Size (H)	Data (H)	Parameter	Description	* The SPECIAL EFFECT Parameter cannot be reset to its factory setting with XG SYSTEM ON.	[MIDI] Voice: Regular/ Organ Voice	Voice: Mic/Vocal Harmony	MIDI Reception (respond/ ignore): Song	Right1 Right2 Right3 Left	Keyboard	Style	Extra	MIDI Transmission (generated data): Right1 Right2 Right3 Left	M.Pad	Style	Song	Upper Lower	[Song Creator] PLAY: PLAY	PLAY: REW	REC: From panel operations
04	00	00	2	00-7F 00-7F	INSERTION EFFECT TYPE MSB INSERTION EFFECT TYPE LSB	Vocoder(89), Chordal(90), Detune(91), Chromatic(92),Thru(0...88, 93...127)		X	O			O								O	O	X
		02	1	00-7F	INSERTION EFFECT PARAMETER 1 Harmony Mode			X	O			O								O	O	X
		03	1	00-7F	INSERTION EFFECT PARAMETER 2 Harmony Gender Type	Off(0), Auto(1)		X	O			O								O	O	X
		04	1	00-7F	INSERTION EFFECT PARAMETER 3 Lead Gender Type	Off(0), Unison(1), Male(2), Female(3)		X	O			O								O	O	X
		05	1	00-7F	INSERTION EFFECT PARAMETER 4 Lead Gender Depth	-64...0...+63(0...127)		X	O			O								O	O	X
		06	1	00-7F	INSERTION EFFECT PARAMETER 5 Lead Pitch Correction	Free(0), Correct(1)		X	O			O								O	O	X
		07	1	00-7F	INSERTION EFFECT PARAMETER 6 Auto Upper Gender Threshold	0...12(0...12)		X	O			O								O	O	X

Address (H)			Size (H)	Data (H)	Parameter	Description	* The SPECIAL EFFECT Parameter cannot be reset to its factory setting with XG SYSTEM ON.	[MIDI] Voice: Regular/ Organ Voice	Voice: Mic/Vocal Harmony	MIDI Reception (respond/ignore): Song	Right1 Right2 Right3 Left	Keyboard	Style	Extra	MIDI Transmission (generated data): Right1 Right2 Right3 Left	M.Pad	Style	Song	Upper Lower	[Song Creator] PLAY: PLAY	PLAY: REW	REC: From panel operations
		08	1	00-7F	INSERTION EFFECT PARAMETER 7 Auto Lower Gender Threshold	0...12(0...12)		X	O			O								O	O	X
		09	1	00-7F	INSERTION EFFECT PARAMETER 8 Upper Gender Depth	-64...0+63(0...127)		X	O			O								O	O	X
		0A	1	00-7F	INSERTION EFFECT PARAMETER 9 Lower Gender Depth	-64...0...+63(0...127)		X	O			O								O	O	X
		0B	1	00-7F	INSERTION EFFECT PARAMETER 10	L63>H...L=H...L<H63 (1...64...127)		X	O			O								O	O	X
		0C	1	00-7F	INSERTION EFFECT PART NUMBER	AD(64), OFF(0...63, 65...127)		X	O			O								O	O	O
		0D	1	00-7F	MW INSERTION CONTROL DEPTH	-64...0...+63		X	X			X					X			X	X	X
		0E	1	00-7F	BEND INSERTION CONTROL DEPTH	-64...0...+63		X	X			X					X			X	X	X
		0F	1	00-7F	CAT INSERTION CONTROL DEPTH	-64...0...+63		X	X			X					X			X	X	X
		10	1	00-7F	AC1 INSERTION CONTROL DEPTH	-64...0...+63		X	X			X					X			X	X	X
		11	1	00-7F	AC2 INSERTION CONTROL DEPTH	-64...0...+63		X	X			X					X			X	X	X

TOTAL SIZE 12

		14	1	00-7F	UNIQUE INSERTION EFFECT EXTERNAL CONTROL CH1 (HARMONY CHANNEL)	1...16(0...15), OFF(127)		X	O			O								O	O	X
		15	1	00-7F	UNIQUE INSERTION EFFECT EXTERNAL CONTROL CH1 (MELODY CHANNEL)	1...16(0...15), OFF(127)		X	O			O					O			O	O	X

TOTAL SIZE 2

		20	1	00-7F	INSERTION EFFECT PARAMETER 11 Vibrato Depth	0...100cemt(0...127)		X	O			O								O	O	X
		21	1	00-7F	INSERTION EFFECT PARAMETER 12 Vibrato Rate	0Hz(0),0.1...12.7Hz(1...127)		X	O			O								O	O	X
		22	1	00-7F	INSERTION EFFECT PARAMETER 13 Vibrato Delay	0...2.54sec(0...127)		X	O			O								O	O	X
		23	1	00-7F	INSERTION EFFECT PARAMETER 14			X	X			X					X			X	X	X
		24	1	00-7F	INSERTION EFFECT PARAMETER 15			X	X			X					X			X	X	X
		25	1	00-7F	INSERTION EFFECT PARAMETER 16			X	X			X					X			X	X	X

TOTAL SIZE 6

: Transmitted via panel operations

MIDI Parameter Change table (MULTI PART)

Address (H)			Size (H)	Data (H)	Parameter	Description	XG Default (H)	[MIDI] Voice: Regular/ Organ Voice	Voice: Mic/Vocal Harmony	MIDI Reception (respond/ignore): Song	Right1 Right2 Right3 Left	Keyboard	Style	Extra	MIDI Transmission (generated data): Right1 Right2 Right3 Left	M.Pad	Style	Song	Upper Lower	[Song Creator] PLAY: PLAY	PLAY: REW	REC: From panel operations
8	nn	00	1	00-20	NOT USED			X	X	X	X	X	X	X	X	X	X	X	X	X	X	X
		01	1	00-7F	BANK SELECT MSB	0...127	part10=7F, other parts=00	O	X	O	O	X	O	O	X	X	X	O	X	O	O	X
		02	1	00-7F	BANK SELECT LSB	0...127	00	O	X	O	O	X	O	O	X	X	X	O	X	O	O	X
		03	1	00-7F	PROGRAM NUMBER	1...128	00	O	X	O	O	X	O	O	X	X	X	O	X	O	O	X
		04	1	00-0F,7F	Rcv CHANNEL	1...16, OFF	Part No.	O	X	O	X	X	X	X	X	X	X	O	X	O	X	X
		05	1	00-01	MONO/POLY MODE	MONO, POLY	01	O	X	O	X	X	X	X	X	X	X	O	X	O	X	X
		06	1	00-02	SAME NOTE NUMBER KEY ON ASSIGN	SINGLE, MULTI, INST (for Drum)	01	O	X	O	X	X	O	X	X	X	X	O	X	O	X	X
		07	1	00-03	PART MODE	NORMAL, DRUM, DRUMS1...2	part10=02, other parts=00	O	X	O	X	X	X	X		X			X	O	X	O
		08	1	28-58	NOTE SHIFT	-24...0...+24[semitones]	40	O	X	O	O	X	O	O	X	X	X	O	X	O	O	X
		09 0A	2	00-0F 00-0F	DETUNE	-12.8...0...+12.7[Hz] 1st bit3-0 bit7-4 2nd bit3-0 bit3-0	08 00	O	X	O	O	X	O	O	X	X	X	O	X	O	X	X
		0B	1	00-7F	VOLUME	0...127	64	O	X	O	O	X	O	O	X	X	X	O	X	O	O	X
		0C	1	00-7F	VELOCITY SENSE DEPTH	0...127	40	O	X	O	O	X	X	O		O	X	O	X	O	O	O
		0D	1	00-7F	VELOCITY SENSE OFFSET	0...127	40	O	X	O	O	X	X	O		O	X	O	X	O	O	O
		0E	1	00-7F	PAN	RND,L63...C...R63	40	O	X	O	O	X	O	O	X	X	X	O	X	O	O	X
		0F	1	00-7F	NOTE LIMIT LOW	C-2...G8	00	O	X	O	X	X	X	X	X	X	X	O	X	O	X	X
		10	1	00-7F	NOTE LIMIT HIGH	C-2...G8	7F	O	X	O	X	X	X	X	X	X	X	O	X	O	X	X
		11	1	00-7F	DRY LEVEL	0...127	7F	O	X	O	O	X	O	O					X	O	O	O
		12	1	00-7F	CHORUS SEND	0...127	00	O	X	O	O	X	O	O	X	X	X	O	X	O	O	X
		13	1	00-7F	REVERB SEND	0...127	28	O	X	O	O	X	O	O	X	X	X	O	X	O	O	X
		14	1	00-7F	VARIATION SEND	0...127	00	O	X	O	O	X	O	O	X	X	X	O	X	O	O	O
		15	1	00-7F	VIBRATO RATE	-64...0...+63	40	O	X	O	O	X	O	O	X	X	X	O	X	O	O	X
		16	1	00-7F	VIBRATO DEPTH	-64...0...+63	40	O	X	O	O	X	O	O	X	X	X	O	X	O	O	X
		17	1	00-7F	VIBRATO DELAY	-64...0...+63	40	O	X	O	O	X	O	O	X	X	X	O	X	O	O	X
		18	1	00-7F	FILTER CUTOFF FREQUENCY	-64...0...+63	40	O	X	O	O	X	O	O	X	X	X	O	X	O	O	X
		19	1	00-7F	FILTER RESONANCE	-64...0...+63	40	O	X	O	O	X	O	O	X	X	X	O	X	O	O	X
		1A	1	00-7F	EG ATTACK TIME	-64...0...+63	40	O	X	O	O	X	O	O	X	X	X	O	X	O	O	X
		1B	1	00-7F	EG DECAY TIME	-64...0...+63	40	O	X	O	O	X	O	O	X	X	X	O	X	O	O	X

Address (H)			Size (H)	Data (H)	Parameter	Description	XG Default (H)	[MIDI] Voice: Regular/ Organ Voice	Voice: Mic/Vocal Harmony	MIDI Reception (respond/ignore): Song	Right1 Right2 Right3 Left	Keyboard	Style	Extra	MIDI Transmission (generated data): Right1 Right2 Right3 Left	M.Pad	Style	Song	Upper Lower	[Song Creator] PLAY: PLAY	PLAY: REW	REC: From panel operations
		1C	1	00-7F	EG RELEASE TIME	-64...0...+63	40	O	X	O	O	X	O	O	X	X	X	O	X	O	O	X
		1D	1	28-58	MW PITCH CONTROL	-24...0...+24[semitones]	40	O	X	O	O	X	X	O	X	X	X	O	X	O	X	X
		1E	1	00-7F	MW LOW PASS FILTER CONTROL	-9600...0...+9450[cent]	40	O	X	O	O	X	X	O		O	X	O	X	O	O	O
		1F	1	00-7F	MW AMPLITUDE CONTROL	-100...0...+100[%]	40	O	X	O	O	X	X	O	X	X	X	O	X	O	X	X
		20	1	00-7F	MW LFO PMOD DEPTH	0...127	0A	O	X	O	O	X	X	O		O	X	O	X	O	O	O
		21	1	00-7F	MW LFO FMOD DEPTH	0...127	00	O	X	O	O	X	X	O		O	X	O	X	O	O	O
		22	1	00-7F	MW LFO AMOD DEPTH	0...127	00	O	X	O	O	X	X	O		O	X	O	X	O	O	O
		23	1	28-58	BEND PITCH CONTROL	-24...+24[semitones]	42	O	X	O	O	X	O	O	X	X	X	O	X	O	X	X
		24	1	00-7F	BEND LOW PASS FILTER CONTROL	-9600...0...+9450[cent]	40	O	X	O	O	X	O	O	X	X	X	O	X	O	X	X
		25	1	00-7F	BEND AMPLITUDE CONTROL	-100...0...+100[%]	40	O	X	O	O	X	O	O	X	X	X	O	X	O	X	X
		26	1	00-7F	BEND LFO PMOD DEPTH	0...127	00	O	X	O	O	X	O	O	X	X	X	O	X	O	X	X
		27	1	00-7F	BEND LFO FMOD DEPTH	0...127	00	O	X	O	O	X	O	O	X	X	X	O	X	O	X	X
		28	1	00-7F	BEND LFO AMOD DEPTH	0...127	00	O	X	O	O	X	O	O	X	X	X	O	X	O	X	X

TOTAL SIZE 29

		30	1	00-01	Rcv PITCH BEND	OFF, ON	01	O	X	O	X	X	X	X	X	X	X	O	X	O	X	X
		31	1	00-01	Rcv CH AFTER TOUCH(CAT)	OFF, ON	01	O	X	O	X	X	X	X	X	X	X	O	X	O	X	X
		32	1	00-01	Rcv PROGRAM CHANGE	OFF, ON	01	O	X	O	X	X	X	X	X	X	X	O	X	O	X	X
		33	1	00-01	Rcv CONTROL CHANGE	OFF, ON	01	O	X	O	X	X	X	X	X	X	X	O	X	O	X	X
		34	1	00-01	Rcv POLY AFTER TOUCH(PAT)	OFF, ON	01	O	X	O	X	X	X	X	X	X	X	O	X	O	X	X
		35	1	00-01	Rcv NOTE MESSAGE	OFF, ON	01	O	X	O	X	X	X	X	X	X	X	O	X	O	X	X
		36	1	00-01	Rcv RPN	OFF, ON	01	O	X	O	X	X	X	X	X	X	X	O	X	O	X	X
		37	1	00-01	Rcv NRPN	OFF, ON	XGmode=01, GMmode=00	O	X	O	X	X	X	X	X	X	X	O	X	O	X	X
		38	1	00-01	Rcv MODULATION	OFF, ON	01	O	X	O	X	X	X	X	X	X	X	O	X	O	X	X
		39	1	00-01	Rcv VOLUME	OFF, ON	01	O	X	O	X	X	X	X	X	X	X	O	X	O	X	X
		3A	1	00-01	Rcv PAN	OFF, ON	01	O	X	O	X	X	X	X	X	X	X	O	X	O	X	X
		3B	1	00-01	Rcv EXPRESSION	OFF, ON	01	O	X	O	X	X	X	X	X	X	X	O	X	O	X	X
		3C	1	00-01	Rcv HOLD1	OFF, ON	01	O	X	O	X	X	X	X	X	X	X	O	X	O	X	X
		3D	1	00-01	Rcv PORTAMENTO	OFF, ON	01	O	X	O	X	X	X	X	X	X	X	O	X	O	X	X
		3E	1	00-01	Rcv SOSTENUTO	OFF, ON	01	O	X	O	X	X	X	X	X	X	X	O	X	O	X	X
		3F	1	00-01	Rcv SOFT PEDAL	OFF, ON	01	O	X	O	X	X	X	X	X	X	X	O	X	O	X	X
		40	1	00-01	Rcv BANK SELECT	OFF, ON	01	O	X	O	X	X	X	X	X	X	X	O	X	O	X	X
		41	1	00-7F	SCALE TUNING C	-64...0...+63[cent]	40	O	X	O	O	X	O	O		X		O	X	O	O	O
		42	1	00-7F	SCALE TUNING C#	-64...0...+63[cent]	40	O	X	O	O	X	O	O		X		O	X	O	O	O
		43	1	00-7F	SCALE TUNING D	-64...0...+63[cent]	40	O	X	O	O	X	O	O		X		O	X	O	O	O
		44	1	00-7F	SCALE TUNING D#	-64...0...+63[cent]	40	O	X	O	O	X	O	O		X		O	X	O	O	O
		45	1	00-7F	SCALE TUNING E	-64...0...+63[cent]	40	O	X	O	O	X	O	O		X		O	X	O	O	O
		46	1	00-7F	SCALE TUNING F	-64...0...+63[cent]	40	O	X	O	O	X	O	O		X		O	X	O	O	O
		47	1	00-7F	SCALE TUNING F#	-64...0...+63[cent]	40	O	X	O	O	X	O	O		X		O	X	O	O	O
		48	1	00-7F	SCALE TUNING G	-64...0...+63[cent]	40	O	X	O	O	X	O	O		X		O	X	O	O	O
		49	1	00-7F	SCALE TUNING G#	-64...0...+63[cent]	40	O	X	O	O	X	O	O		X		O	X	O	O	O
		4A	1	00-7F	SCALE TUNING A	-64...0...+63[cent]	40	O	X	O	O	X	O	O		X		O	X	O	O	O
		4B	1	00-7F	SCALE TUNING A#	-64...0...+63[cent]	40	O	X	O	O	X	O	O		X		O	X	O	O	O
		4C	1	00-7F	SCALE TUNING B	-64...0...+63[cent]	40	O	X	O	O	X	O	O		X		O	X	O	O	O
		4D	1	28-58	CAT PITCH CONTROL	-24...0...+63[semitones]	40	O	X	O	O	X	X	O	X	X	X	O	X	O	X	X
		4E	1	00-7F	CAT LOW PASS FILTER CONTROL	-9600...0...+9450[cent]	40	O	X	O	O	X	X	O		O	X	O	X	O	O	O
		4F	1	00-7F	CAT AMPLITUDE CONTROL	-100...0...+100[%]	40	O	X	O	O	X	X	O	X	X	X	O	X	O	X	X
		50	1	00-7F	CAT LFO PMOD DEPTH	0...127	00	O	X	O	O	X	X	O		O	X	O	X	O	O	O
		51	1	00-7F	CAT LFO FMOD DEPTH	0...127	00	O	X	O	O	X	X	O		O	X	O	X	O	O	O
		52	1	00-7F	CAT LFO AMOD DEPTH	0...127	00	O	X	O	O	X	X	O		O	X	O	X	O	O	O
		53	1	28-58	PAT PITCH CONTROL	-24...0...+24	40	O	X	O	X	X	X	X	X	X	X	O	X	O	X	X
		54	1	00-7F	PAT LOW PASS FILTER CONTROL	-9600...0...+9450[cent]	40	O	X	O	X	X	X	X	X	X	X	O	X	O	X	X
		55	1	00-7F	PAT AMPLITUDE CONTROL	-100...0...+100[%]	40	O	X	O	X	X	X	X	X	X	X	O	X	O	X	X
		56	1	00-7F	PAT LFO PMOD DEPTH	0...127	00	O	X	O	X	X	X	X	X	X	X	O	X	O	X	X
		57	1	00-7F	PAT LFO FMOD DEPTH	0...127	00	O	X	O	X	X	X	X	X	X	X	O	X	O	X	X
		58	1	00-7F	PAT LFO AMOD DEPTH	0...127	00	O	X	O	X	X	X	X	X	X	X	O	X	O	X	X
		59	1	00-5F	AC1 CONTROLLER NUMBER	0...95	10	O	X	O	X	X	X	X	X	X	X	O	X	O	X	X
		5A	1	28-58	AC1 PITCH CONTROL	-24...0...+24[semitones]	40	O	X	O	X	X	X	X	X	X	X	O	X	O	X	X
		5B	1	00-7F	AC1 LOW PASS FILTER CONTROL	-9600...0...+9450[cent]	40	O	X	O	X	X	X	X	X	X	X	O	X	O	X	X
		5C	1	00-7F	AC1 AMPLITUDE CONTROL	-100...0...+100[%]	40	O	X	O	X	X	X	X	X	X	X	O	X	O	X	X
		5D	1	00-7F	AC1 LFO PMOD DEPTH	0...127	00	O	X	O	X	X	X	X	X	X	X	O	X	O	X	X
		5E	1	00-7F	AC1 LFO FMOD DEPTH	0...127	00	O	X	O	X	X	X	X	X	X	X	O	X	O	X	X
		5F	1	00-7F	AC1 LFO AMOD DEPTH	0...127	00	O	X	O	X	X	X	X	X	X	X	O	X	O	X	X
		60	1	00-5F	AC2 CONTROLLER NUMBER	0...95	11	O	X	O	X	X	X	X	X	X	X	O	X	O	X	X
		61	1	28-58	AC2 PITCH CONTROL	-24...0...+24[semitones]	40	O	X	O	X	X	X	X	X	X	X	O	X	O	X	X
		62	1	00-7F	AC2 LOW PASS FILTER CONTROL	-9600...0...+9450[cent]	40	O	X	O	X	X	X	X	X	X	X	O	X	O	X	X
		63	1	00-7F	AC2 AMPLITUDE CONTROL	-100...0...+100[%]	40	O	X	O	X	X	X	X	X	X	X	O	X	O	X	X
		64	1	00-7F	AC2 LFO PMOD DEPTH	0...127	00	O	X	O	X	X	X	X	X	X	X	O	X	O	X	X
		65	1	00-7F	AC2 LFO FMOD DEPTH	0...127	00	O	X	O	X	X	X	X	X	X	X	O	X	O	X	X
		66	1	00-7F	AC2 LFO AMOD DEPTH	0...127	0	O	X	O	X	X	X	X	X	X	X	O	X	O	X	X
		67	1	00-01	PORTAMENTO SWITCH	OFF, ON	00	O	X	O	O	X	X	O	X	X	X	O	X	O	O	X
		68	1	00-7F	PORTAMENTO TIME	0...127	00	O	X	O	O	X	X	O	X	X	X	O	X	O	O	X
		69	1	00-7F	PITCH EG INITIAL LEVEL	-64...0...+63	40	O	X	O	O	X	X	O	X	X	X	O	X	O	X	X
		6A	1	00-7F	PITCH EG ATTACK TIME	-64...0...+63	40	O	X	O	O	X	X	O	X	X	X	O	X	O	X	X
		6B	1	00-7F	PITCH EG RELEASE LEVEL	-64...0...+63	40	O	X	O	O	X	X	O	X	X	X	O	X	O	X	X
		6C	1	00-7F	PITCH EG RELEASE TIME	-64...0...+63	40	O	X	O	O	X	X	O	X	X	X	O	X	O	X	X
		6D	1	01-7F	VELOCITY LIMIT LOW	1...127	01	O	X	O	O	X	X	O	X	X	X	O	X	O	X	X
		6E	1	01-7F	VELOCITY LIMIT HIGH	1...127	7F	O	X	O	O	X	X	O	X	X	X	O	X	O	X	X

TOTAL SIZE 3F

Address (H)			Size (H)	Data (H)	Parameter	Description	XG Default (H)	[MIDI] Voice: Regular/ Organ Voice	Voice: Mic/Vocal Harmony	MIDI Reception (respond/ignore): Song	Right1 Right2 Right3 Left	Keyboard	Style	Extra	MIDI Transmission (generated data): Right1 Right2 Right3 Left	M.Pad	Style	Song	Upper Lower	[Song Creator] PLAY: PLAY	PLAY: REW	REC: From panel operations
		70	1		NOT USED		-	-	-	-	-	-	-	-	-	-	-	-	-	-	-	-
		71	1		NOT USED		-	-	-	-	-	-	-	-	-	-	-	-	-	-	-	-
		72	1	00-7F	EQ BASS GAIN	-12dB...+12dB	40	O	X	O	O	X	O	O					X	O	O	O
		73	1	00-7F	EQ TREBLE GAIN	-12dB...+12dB	40	O	X	O	O	X	O	O					X	O	O	O

TOTAL SIZE 04

		74	1		NOT USED		-	-	-	-	-	-	-	-	-	-	-	-	-	-	-	-
		75	1		NOT USED		-	-	-	-	-	-	-	-	-	-	-	-	-	-	-	-
		76	1	04-28	EQ BASS FREQUENCY	32...2.0k[Hz]	0C	O	X	O	O	X	X	O		O	X	O	X	O	O	O
		77	1	1C-3A	EQ TREBLE FREQUENCY	500...16.0k[Hz]	36	O	X	O	O	X	X	O		O	X	O	X	O	O	O
		78	1		NOT USED		-	-	-	-	-	-	-	-	-	-	-	-	-	-	-	-
		79	1		NOT USED		-	-	-	-	-	-	-	-	-	-	-	-	-	-	-	-
		7A	1		NOT USED		-	-	-	-	-	-	-	-	-	-	-	-	-	-	-	-
		7B	1		NOT USED		-	-	-	-	-	-	-	-	-	-	-	-	-	-	-	-
		7C	1		NOT USED		-	-	-	-	-	-	-	-	-	-	-	-	-	-	-	-
		7D	1		NOT USED		-	-	-	-	-	-	-	-	-	-	-	-	-	-	-	-
		7E	1		NOT USED		-	-	-	-	-	-	-	-	-	-	-	-	-	-	-	-
		7F	1		NOT USED		-	-	-	-	-	-	-	-	-	-	-	-	-	-	-	-

TOTAL SIZE 0C

: Transmitted via panel operations

0A	nn	40	1	00-7F	MW OFFSET LEVEL CONTROL	-100 - 100[%]	40	O	-	O	O	X	X	O	O	O	X	O	X	O	O	O
		41	1	00-7F	BEND OFFSET LEVEL CONTROL	-100 - 100[%]	40	O	-	O	O	X	X	O	X	X	X	O	X	O	O	X
		42	1	00-7F	CAT OFFSET LEVEL CONTROL	-100 - 100[%]	40	O	-	O	O	X	X	O	O	O	X	O	X	O	O	O
		43	1	00-7F	PAT OFFSET LEVEL CONTROL	-100 - 100[%]	40	O	-	O	O	X	X	O	X	X	X	O	X	O	O	X
		44	1	00-7F	AC1 OFFSET LEVEL CONTROL	-100 - 100[%]	40	O	-	O	O	X	X	O	X	X	X	O	X	O	O	X
		45	1	00-7F	AC2 OFFSET LEVEL CONTROL	-100 - 100[%]	40	O	-	O	O	X	X	O	X	X	X	O	X	O	O	X

TOTAL SIZE 06

nn : PART NUMBER

If there is a Drum Voice assigned to the part, the following parameters are ineffective.
- BANK SELECT LSB
- MONO/POLY MODE
- SCALE TUNING
- PORTAMENTO
- PITCH EG
- FILTER MODULATION DEPTH (FMOD DEPTH)
- AMPLITUDE MODULATION DEPTH (AMOD DEPTH)

MIDI Parameter Change table (A/D PART)

Address (H)			Size (H)	Data (H)	Parameter	Description	* The A/D PART parameter cannot be reset to its factory setting with XG System On.	[MIDI] Voice: Regular/ Organ Voice	Voice: Mic/Vocal Harmony	MIDI Reception (respond/ ignore): Song	Right1 Right2 Right3 Left	Keyboard	Style	Extra	MIDI Transmission (generated data): Right1 Right2 Right3 Left	M.Pad	Style	Song	Upper Lower	[Song Creator] PLAY: PLAY	PLAY: REW	REC: From panel operations
10	0n	00	1	00-01	INPUT GAIN	MIC, LINE		X	X			X					X			X	X	X
		01	1	00-7F	BANK SELECT MSB	0...127		X	X			X					X			X	X	X
		02	1	00-7F	BANK SELECT LSB	0...127		X	X			X					X			X	X	X
		03	1	00-7F	PROGRAM NUMBER	1...128		X	X			X					X			X	X	X
		04	1	00-0F,7F	Rcv CHANNEL	1...16,OFF		X	O			O					O			O	X	X
		05	1		NOT USED			-	-			-					-			-	-	-
		06	1		NOT USED			-	-			-					-			-	-	-
		07	1		NOT USED			-	-			-					-			-	-	-
		08	1		NOT USED			-	-			-					-			-	-	-
		09	1		NOT USED			-	-			-					-			-	-	-
		0A	1		NOT USED			-	-			-					-			-	-	-
		0B	1	00-7F	VOLUME	0...127		X	O			O								O	X	X
		0C	1		NOT USED			-	-			-					-			-	-	-
		0D	1		NOT USED			-	-			-					-			-	-	-
		0E	1	01-7F	PAN	L63...C...R63		X	O			O								O	X	X
		0F	1		NOT USED			-	-			-					-			-	-	-
		10	1		NOT USED			-	-			-					-			-	-	-
		11	1	00-7F	DRY LEVEL	0...127		X	O			O								O	X	X
		12	1	00-7F	CHORUS SEND	0...127		X	O			O								O	X	X
		13	1	00-7F	REVERB SEND	0...127		X	O			O								O	X	X
		14	1	00-7F	VARIATION SEND	0...127		X	O			O								O	X	X

TOTAL SIZE 15

n : Channel Number
: Transmitted via panel operations

MIDI Parameter Change table (DRUM SETUP)

Address (H)			Size (H)	Data (H)	Parameter	Description	XG Default (H)	[MIDI] Voice: Regular/ Organ Voice	Voice: Mic/Vocal Harmony	MIDI Reception (respond/ignore): Song	Right1 Right2 Right3 Left	Keyboard	Style	Extra	MIDI Transmission (generated data): Right1 Right2 Right3 Left	M.Pad	Style	Song	Upper Lower	[Song Creator] PLAY: PLAY	REC: REW	From panel operations
3n	rr	00	1	00-7F	PITCH COARSE	-64...0...+63	40	O(Drum Only)	X	O(Available only for song parts)					O					O	X	X
		01	1	00-7F	PITCH FINE	-64...0...+63[cent]	40	O(Drum Only)	X	O(Available only for song parts)					O					O	X	X
		02	1	00-7F	LEVEL	0...127	Depends on the note	O(Drum Only)	X	O(Available only for song parts)					O					O	X	X
		03	1	00-7F	ALTERNATE GROUP	OFF, 1...127	Depends on the note	O(Drum Only)	X	O(Available only for song parts)					O					O	X	X
		04	1	00-7F	PAN	RND, L63...C...R63	Depends on the note	O(Drum Only)	X	O(Available only for song parts)					O					O	X	X
		05	1	00-7F	REVERB SEND	0...127	Depends on the note	O(Drum Only)	X	O(Available only for song parts)					O					O	X	X
		06	1	00-7F	CHORUS SEND	0...127	Depends on the note	O(Drum Only)	X	O(Available only for song parts)					O					O	X	X
		07	1	00-7F	VARIATION SEND	0...127	7F	O(Drum Only)	X	O(Available only for song parts)					O					O	X	X
		08	1	00-01	KEY ASSIGN	SINGLE, MULTI	00	O(Drum Only)	X	O(Available only for song parts)					O					O	X	X
		09	1	00-01	Rcv NOTE OFF	OFF, ON	Depends on the note	O(Drum Only)	X	O(Available only for song parts)					O					O	X	X
		0A	1	00-01	Rcv NOTE ON	OFF, ON	01	O(Drum Only)	X	O(Available only for song parts)					O					O	X	X
		0B	1	00-7F	LOW PASS FILTER CUTOFF FREQUENCY	-64...0...+63	40	O(Drum Only)	X	O(Available only for song parts)					O					O	X	X
		0C	1	00-7F	LOW PASS FILTER RESONANCE	-64...0...+63	40	O(Drum Only)	X	O(Available only for song parts)					O					O	X	X
		0D	1	00-7F	EG ATTACK RATE	-64...0...+63	40	O(Drum Only)	X	O(Available only for song parts)					O					O	X	X
		0E	1	00-7F	EG DECAY1 RATE	-64...0...+63	40	O(Drum Only)	X	O(Available only for song parts)					O					O	X	X
		0F	1	00-7F	EG DECAY2 RATE	-64...0...+63	40	O(Drum Only)	X	O(Available only for song parts)					O					O	X	X

TOTAL SIZE 10

Address (H)			Size (H)	Data (H)	Parameter	Description	XG Default (H)	[MIDI] Voice: Regular/ Organ Voice	Voice: Mic/Vocal Harmony	MIDI Reception (respond/ignore): Song	Right1 Right2 Right3 Left	Keyboard	Style	Extra	MIDI Transmission (generated data): Right1 Right2 Right3 Left	M.Pad	Style	Song	Upper Lower	[Song Creator] PLAY: PLAY	REC: REW	From panel operations
		20	1	00-7F	EQ BASS GAIN	-12...+12[dB]	40	X	X			X					X			X	X	X
		21	1	00-7F	EQ TREBLE GAIN	-12...+12[dB]	40	X	X			X					X			X	X	X
		22	1		NOT USED		-	-	-			-					-			-	-	-
		23	1		NOT USED		-	-	-			-					-			-	-	-
		24	1	04-28	EQ BASS FREQUENCY	32...2.0k[Hz]	0C	X	X			X					X			X	X	X
		25	1	1C-3A	EQ TREBLE FREQUENCY	500...16.0k[Hz]	36	X	X			X					X			X	X	X
		26	1		NOT USED		-	-	-			-					-			-	-	-
		27	1		NOT USED		-	-	-			-					-			-	-	-
		28	1		NOT USED		-	-	-			-					-			-	-	-
		29	1		NOT USED		-	-	-			-					-			-	-	-
		2A	1		NOT USED		-	-	-			-					-			-	-	-
		2B	1		NOT USED		-	-	-			-					-			-	-	-
		2C	1		NOT USED		-	-	-			-					-			-	-	-
		2D	1		NOT USED		-	-	-			-					-			-	-	-

TOTAL SIZE 0E

n : Drum Setup Number (0-1)
rr : note number(0D-5B)

In the following cases, the TYROS will initialize all Drum Setups.
XG SYSTEM ON received
GM SYSTEM ON received
GM LEVEL2 SYSTEM ON received
DRUM SETUP RESET received (only when in XG mode)

[Note]
When a part to which a Drum Setup is assigned receives a program change, the assigned Drum Setup will be initialized.
If the same Drum Setup is assigned to two or more parts, changes in Drum Setup parameters (including program changes) will apply to all parts to which it is assigned.

SYSTEM EXCLUSIVE MESSAGES (1)

Not received when Receive System Exclusive Message Parameters is set to off.
Not transmitted when Transmit System Exclusive Message Parmeters is set to off.

System Exclusive Messages (Universal Real Time Messages)

MIDI Event	Data Format	[MIDI] Voice: Regular/ Organ Voice	Voice: Mic/Vocal Harmony	MIDI Reception (respond/ignore): Song	Right1 Right2 Right3 Left	Keyboard	Style	Extra	MIDI Transmission (generated data): Right1 Right2 Right3 Left	M.Pad	Style	Song	Upper Lower	[Song Creator] PLAY: PLAY	REW	REC: From panel operations
Master Volume [GM2]	F0 7F XN 04 01 SS TT F7 11110000 F0 = Exclusive status 01111111 7F = Universal Real Time 0xxxnnnn XN = When N is received N=0-F,whichever is received. X=ignored 00000100 04 = Sub-ID #1=Device Control Message 00000001 01 = Sub-ID #2=Master Volume 0sssssss SS = Volume LSB 0ttttttt TT = Volume MSB 11110111 F7 = End of Exclusive	O	X	O (Available for extra parts of a song)					O					O	O	X
Master Fine Tuning [GM2]	F0 7F XN 04 03 SS TT F7 11110000 F0 = Exclusive status 01111111 7F = Universal Real Time 0xxxnnnn XN = When N is received N=0-F,whichever is received. X=ignored 00000100 04 = Sub-ID #1=Device Control Message 00000011 03 = Sub-ID #2=Master Fine Tuning 0sssssss SS = Fine Tuning LSB 0ttttttt TT = Fine Tuning MSB 11110111 F7 = End of Exclusive	O	X	O					O					O	X	X
Master Coase Tuning [GM2]	F0 7F XN 04 04 SS TT F7 11110000 F0 = Exclusive status 01111111 7F = Universal Real Time 0xxxnnnn XN = When N is received N=0-F,whichever is received. X=ignored 00000100 04 = Sub-ID #1=Device Control Message 00000100 04 = Sub-ID #2=Master Coarse Tuning 00000000 00 0ttttttt TT = Coarse Tuning MSB 11110111 F7 = End of Exclusive	O	X	O (Available for extra parts of a song)					O					O	X	X
Reverb Parameter [GM2]	F0 7F XN 04 05 01 01 01 01 01 PP VV ... F7 11110000 F0 = Exclusive status 01111111 7F = Universal Real Time 0xxxnnnn XN = When N is received N=0-F,whichever is received. X=ignored 00000100 04 = Sub-ID #1=Device Control Message 00000101 05 = Sub-ID #2=Global Parameter Control 00000001 01 = Slot path length = 1 00000001 01 = Parameter ID width = 1 00000001 01 = Value width = 1 00000001 01 = Slot path MSB = 1 00000001 01 = Slot path LSB = 1 (Reverb) 0ppppppp PP = Parameter to be controlled. 0vvvvvvv VV = Value for the Parameter. : : 11110111 F7 = End of Exclusive Parameter(pp) Value(vv) Display ---------- pp=0 Reverb Type 0...8 0:RoomS 1:RoomM 2:RoomL 3:HallM 4:HallL(default) 8:GM Plate pp=1 Reverb Time 0...127 0...11.0s	O	O	O					O					O	O	X
Chorus Parameter [GM2]	F0 7F XN 04 05 01 01 01 01 02 PP VV ... F7 11110000 F0 = Exclusive status 01111111 7F = Universal Real Time 0xxxnnnn XN = When N is received N=0-F,whichever is received. X=ignored 00000100 04 = Sub-ID #1=Device Control Message 00000101 05 = Sub-ID #2=Global Parameter Control 00000001 01 = Slot path length = 1 00000001 01 = Parameter ID width = 1 00000001 01 = Value width = 1 00000001 01 = Slot path MSB = 1 00000010 02 = Slot path LSB = 2 (Chorus) 0ppppppp PP = Parameter to be controlled. 0vvvvvvv VV = Value for the Parameter. : : 11110111 F7 = End of Exclusive Parameter(pp) Value(vv) Display ---------- pp=0 Chorus Type 0...5 0:GM Chorus1 1:GM Chorus2 2:GM Chorus3 (default) 3:GM Chorus4 4:FB Chorus 5:GM Flanger pp=1 Mod Rate 0...127 0...15.5Hz pp=2 Mod Depth 0...127 pp=3 Feedback 0...127 pp=4 Send to Reverb 0...127	O	O	O					O					O	O	X

MIDI Event	Data Format	[MIDI] Voice: Regular/ Organ Voice	Voice: Mic/Vocal Harmony	MIDI Reception (respond/ignore): Song	Reception: Right1 Right2 Right3 Left	Reception: Keyboard	Reception: Style	Reception: Extra	MIDI Transmission (generated data): Right1 Right2 Right3 Left	Transmission: M.Pad	Transmission: Style	Transmission: Song	Transmission: Upper Lower	[Song Creator] PLAY: PLAY	PLAY: REW	REC: From panel operations
Channel Pressure (Aftertouch) [GM2]	F0 7F XN 09 01 0M PP RR ... F7 11110000 F0 = Exclusive status 01111111 7F = Universal Real Time 0xxxnnnn XN = When N is received N=0-F,whichever is received. X=ignored 00001001 09 = Sub-ID #1=Controller Destination Setting 00000001 01 = Sub-ID #2=Controller Type:01(Channel Pressure) 0000mmmm 0M = MIDI Channel (00-0F) 0ppppppp PP = Controlled Parameter 0rrrrrrr RR = Data 11110111 F7 = End of Exclusive Make sure to set both the controlled parameter and the range. Parameters not set will be restored to their default values. Control Parameter(pp) / Data(RR) / Description / Default Value pp=00 Pitch Control / 28H-58H / -24...0...+24semitones / 40H pp=01 Filter Cutoff Control / 00H-7FH / -9600...0...+9450cents / 40H pp=02 Amplitude Control / 00H-7FH / -100...0...+100% / 40H pp=03 LFO Pitch Depth / 00H-7FH / 0...127 / 00H pp=04 LFO Filter Depth / 00H-7FH / 0...127 / 00H pp=05 LFO Amplitude Depth / 00H-7FH / 0...127 / 00H	O	X	O	X	X	X	X	X	X	X	O	X	O	X	X
Controller (Control Change) [GM2]	F0 7F XN 09 03 0M CC PP RR ... F7 11110000 F0 = Exclusive status 01111111 7F = Universal Real Time 0xxxnnnn XN = When N is received N=0-F,whichever is received. X=ignored 00001001 09 = Sub-ID #1=Controller Destination Setting 00000011 03 = Sub-ID #2=Controller Type:03(Control Change) 0000mmmm 0M = MIDI Channel (00-0F) 0ccccccc CC = Controller Number (01H-1FH, 40H-5FH) 0ppppppp PP = Controlled Parameter 0rrrrrrr RR = Range : : 11110111 F7 = End of Exclusive Make sure to set both the controlled parameter and the range. Parameters not set will be restored to their default values. Control Parameter(pp) / Data(RR) / Description / Default Value pp=00 Pitch Control / 28H-58H / -24...0...+24semitones / 40H pp=01 Filter Cutoff Control / 00H-7FH / -9600...0...+9450cents / 40H pp=02 Amplitude Control / 00H-7FH / -100...0...+100% / 40H pp=03 LFO Pitch Depth / 00H-7FH / 0...127 / 00H pp=04 LFO Filter Depth / 00H-7FH / 0...127 / 00H pp=05 LFO Amplitude Depth / 00H-7FH / 0...127 / 00H	O	X	O	X	X	X	X	X	X	X	O	X	O	X	X
Key-Based Instrument Control [GM2]	F0 7F XN 0A 01 0M KK CC VV ... F7 11110000 F0 = Exclusive status 01111111 7F = Universal Real Time 0xxxnnnn XN = When N is received N=0-F,whichever is received. X=ignored 00001010 0A = Sub-ID #1=Key-Based Instrument Control 00000001 01 = Sub-ID #2=Controller 0000mmmm 0M = MIDI Channel (00-0F) 0kkkkkkk KK = Key Number 0ccccccc CC = Controller Number 0vvvvvvv VV = Value : : 11110111 F7 = End of Exclusive Make sure to set both the controlled number and the value. Control Number(CC) / Value(VV) / Description / Default Value CC=07H Volume / 00H-7FH / -100...0...+100% / 40H CC=0AH Pan / 00H-7FH (absolute) / L63...C...R63 / (Preset value) CC=5BH Reverb Send Level / 00H-7FH (absolute) / 0...Max / (Preset value) CC=5DH Chorus Send Level / 00H-7FH (absolute) / 0...Max / (Preset value)	O (Drum Only)	X	O	X	X	X	X	X	X	X	O	X	O	X	X

System Exclusive Messages (Universal Non-Real Time Messages)

MIDI Event	Data Format	[MIDI] Voice: Regular/ Organ Voice	Voice: Mic/Vocal Harmony	MIDI Reception (respond/ignore): Song	Right1 Right2 Right3 Left	Keyboard	Style	Extra	MIDI Transmission (generated data): Right1 Right2 Right3 Left	M.Pad	Style	Song	Upper Lower	[Song Creator] PLAY: PLAY	PLAY: REW	REC: From panel operations
GM1 System On [GM1] [GM2]	F0 7E XN 09 01 F7 11110000 F0 = Exclusive status 01111110 7E = Universal Non-Real Time 0xxxnnnn XN = When N is received N=0-F,whichever is received. X=ignored 00001001 09 = Sub-ID #1=General MIDI Message 00000001 01 = Sub-ID #2=General MIDI On 11110111 F7 = End of Exclusive	O	-	O					O					O	X	O
GM2 System On [GM2]	F0 7E XN 09 03 F7 11110000 F0 = Exclusive status 01111110 7E = Universal Non-Real Time 0xxxnnnn XN = When N is received N=0-F,whichever is received. X=ignored 00001001 09 = Sub-ID #1=General MIDI Message 00000011 03 = Sub-ID #2=General MIDI2 On 11110111 F7 = End of Exclusive	O	-	O					O					O	X	X
General MIDI System Off [GM1] [GM2]	F0 7E XN 09 02 F7 11110000 F0 = Exclusive status 01111110 7E = Universal Non-Real Time 0xxxnnnn XN = When N is received N=0-F,whichever is received. X=ignored 00001001 09 = Sub-ID #1=General MIDI Message 00000010 02 = Sub-ID #2=General MIDI Off 11110111 F7 = End of Exclusive	O	-	O					O					O	X	X
Scale/ Octave Tuning [GM2]	F0 7E XN 08 08 JJ GG MM SS ... F7 11110000 F0 = Exclusive status 01111110 7E = Universal Non-Real Time 0xxxnnnn XN = When N is received N=0-F,whichever is received. X=ignored 00001000 08 = Sub-ID #1=MIDI Tuning Standard 00001000 08 = Sub-ID #2=scale/octave tuning 1byte form 0jjjjjjj JJ = Channel/option byte1 bits 0 to 1 = channel 15 to 16 bits 2 to 6 = reserved 0gggggg GG = Channel byte2 - bits0 to 6 = channel 8 to 14 0mmmmmmm MM= Channel byte2 - bits0 to 6 = channel 1 to 7 0sssssss SS = 12byte tuning offset of 12 semitones from C to B 00H means -64cent 40H means 0cent 7FH means +63cent : : 11110111 F7 = End of Exclusive	O	X	O (Available for song parts)					O					O	X	X

[GM1]...GM Leve1 Required Parameter
[GM2]...GM Leve2 Required Parameter

SYSTEM EXCLUSIVE MESSAGES (2)

Not received when Receive System Exclusive Message Parameters is set to off.
Not transmitted when Transmit System Exclusive Message Parmeters is set to off.

System Exclusive Messages (Style)

[MIDI]

MIDI Event	Data Format	Voice		MIDI Reception (respond/ignore)					MIDI Transmission (generated data)				
		Regular/ Organ Voice	Mic/Vocal Harmony	Song	Right1 Right2 Right3 Left	Keyboard	Style	Extra	Right1 Right2 Right3 Left	M.Pad	Style	Song	Upper Lower
Section Control	F0 43 7E 00 ss dd F7 11110000 F0 = Exclusive status 01000011 43 = YAMAHA ID 01111110 7E = Style 00000000 00 = 0sssssss ss = Switch No. 00H INTRO A 01H INTRO B 02H INTRO C 03H INTRO D 08H MAIN A 09H MAIN B 0AH MAIN C 0BH MAIN D 10H FILL IN AA 11H FILL IN BB 12H FILL IN CC 13H FILL IN DD 18H BREAK FILL 20H ENDING A 21H ENDING B 22H ENDING C 23H ENDING D 0ddddddd dd = Switch On/Off 00H(Off) 7FH(On) 11110111 F7 = End of Exclusive	-	-			O							
Tempo Control	F0 43 7E 01 t4 t3 t2 t1 F7 11110000 F0 = Exclusive status 01000011 43 = YAMAHA ID 01111110 7E = Style 00000001 01 = 0tttttt t4 = tempo4 0tttttt t3 = tempo3 0tttttt t2 = tempo2 0tttttt t1 = tempo1 11110111 F7 = End of Exclusive	-	-			O							
Chord Control	F0 43 7E tt d1 d2 d3 d4 F7 Type1 (tt=02) 11110000 F0 = Exclusive status 01000011 43 = YAMAHA ID 01111110 7E = Style 00000010 02 = type 1 0ddddddd d1 = chord root(cr) 0ddddddd d2 = chord type(ct) 0ddddddd d3 = bass note(bn) 0ddddddd d4 = bass type(bt) 11110111 F7 = End of Exclusive cr : Chord Root 0fffnnnn fff: b or #, nnnn: note(root) 0000nnnn 0n bbb — 0fff0000 x0 reserved 0001nnnn 1n bb — 0fff0001 x1 C 0010nnnn 2n b — 0fff0010 x2 D 0011nnnn 3n natural — 0fff0011 x3 E 0100nnnn 4n # — 0fff0100 x4 F 0101nnnn 5n ## — 0fff0101 x5 G 0110nnnn 6n ### — 0fff0110 x6 A 0fff0111 x7 B ct : Chord Type 0 - 34,127 00000000 00 0 Maj — 00010010 12 18 dim7 00000001 01 1 Maj6 — 00010011 13 19 7th 00000010 02 2 Maj7 — 00010100 14 20 7sus4 00000011 03 3 Maj7(#11) — 00010101 15 21 7b5 00000100 04 4 Maj(9) — 00010110 16 22 7(9) 00000101 05 5 Maj7(9) — 00010111 17 23 7(#11) 00000110 06 6 Maj6(9) — 00011000 18 24 7(13) 00000111 07 7 aug — 00011001 19 25 7(b9) 00001000 08 8 min — 00011010 1A 26 7(b13) 00001001 09 9 min6 — 00011011 1B 27 7(#9) 00001010 0A 10 min7 — 00011100 1C 28 Maj7aug 00001011 0B 11 min7b5 — 00011101 1D 29 7aug 00001100 0C 12 min(9) — 00011110 1E 30 1+8 00001101 0D 13 min7(9) — 00011111 1F 31 1+5 00001110 0E 14 min7(11) — 00100000 20 32 sus4 00001111 0F 15 minMaj7 — 00100001 21 33 1+2+5 00010000 10 16 minMaj7(9) — 00100010 22 34 cc 00010001 11 17 dim bn : On Bass Chord — Same as Chord root 127:No bass chord bt : Bass Chord — Same as Chord type 127:No bass chord	-	-			O							
	Type2 (tt=03) 11110000 F0 = Exclusive status 01000011 43 = YAMAHA ID 01111110 7E = Style 00000011 03 = type 2 0ddddddd dd = note1 0ddddddd dd = note2 0ddddddd dd = note3 : : 0ddddddd dd = note10 11110111 F7 = End of Exclusive	-	-			O						X	

: Transmitted via panel operations

System Exclusive Messages (XG)

[MIDI]

MIDI Event	Data Format	Voice		MIDI Reception (respond/ignore)					MIDI Transmission (generated data)				
		Regular/ Organ Voice	Mic/Vocal Harmony	Song	Right1 Right2 Right3 Left	Keyboard	Style	Extra	Right1 Right2 Right3 Left	M.Pad	Style	Song	Upper Lower
XG Parameter Changes	F0 43 1n 4C hh mm ll dd ... F7 11110000 F0 = Exclusive status 01000011 43 = YAMAHA ID 0001nnnn 1n = Device Number n=always 0(when transmit), n=0-F(when recieve) 01001100 4C = Model ID 0hhhhhhh hh = Address High 0mmmmmmm mm= Address Mid 0llllllll ll = Address Low 0ddddddd dd = Data : : 11110111 F7 = End of Exclusive	* Refer to Parameter Change Table.		○ * Refer to Parameter Change Table.					○ * Refer to Parameter Change Table.				
XG Bulk Dump	F0 43 0n 4C aa bb hh mm ll dd ... dd cc F7 11110000 F0 = Exclusive status 01000011 43 = YAMAHA ID 0000nnnn 0n = Device Number n=always 0(when transmit), n=0-F(when recieve) 01001100 4C = Model ID 0aaaaaaa aa = Byte Count MSB 0bbbbbbb bb = Byte Count LSB 0hhhhhhh hh = Address High 0mmmmmmm mm= Address Mid 0llllllll ll = Address Low 0ddddddd dd = Data : : 0ddddddd dd = Data 0ccccccc cc = Checksum 11110111 F7 = End of Exclusive	* Refer to Parameter Change Table.		○ * Refer to Parameter Change Table.					○ * Refer to Parameter Change Table.				
XG Prameter Request	F0 43 3n 4C hh mm ll F7 11110000 F0 = Exclusive status 01000011 43 = YAMAHA ID 0011nnnn 3n = Device Number n=always 0(when transmit), n=0-F(when recieve) 01001100 4C = Model ID 0hhhhhhh hh = Address High 0mmmmmmm mm= Address Mid 0llllllll ll = Address Low 11110111 F7 = End of Exclusive	-	-	○ * Refer to Parameter Change Table.					○ * Refer to Parameter Change Table.				
XG Dump Request	F0 43 2n 4C hh mm ll F7 11110000 F0 = Exclusive status 01000011 43 = YAMAHA ID 0010nnnn 2n = Device Number n=always 0(when transmit), n=0-F(when recieve) 01001100 4C = Model ID 0hhhhhhh hh = Address High 0mmmmmmm mm= Address Mid 0llllllll ll = Address Low 11110111 F7 = End of Exclusive	-	-	○ * Refer to Parameter Change Table.					○ * Refer to Parameter Change Table.				

System Exclusive Messages (Clavinova compliance)

```
11110000 F0 = Exclusive status
01000011 43 = YAMAHA ID
01110011 73 = Clavinova ID
   :         :
11110111 F7 = End of Exclusive
```

[MIDI]

MIDI Event	Data Format	Voice		MIDI Reception (respond/ignore)					MIDI Transmission (generated data)				
		Regular/ Organ Voice	Mic/Vocal Harmony	Song	Right1 Right2 Right3 Left	Keyboard	Style	Extra	Right1 Right2 Right3 Left	M.Pad	Style	Song	Upper Lower
Internal Clock	F0 43 73 01 02 F7 00000001 01 = Model ID (Clavinova common ID) 00000010 02 = Internal Clock Substatus	-		○					X				
External Clock	F0 43 73 01 03 F7 00000001 01 = Model ID (Clavinova common ID) 00000011 03 = External Clock Substatus	-	-	○					X				
Organ Flutes data Bulk Dump	F0 43 73 01 06 0B 00 00 01 06 0n [Balk Data] sum F7 01H Model ID (Clavinova common ID) 06H Bulk ID 0BH Bulk No. (Organ Flutes data Bulk Dump) 00H,00H,01H,06H Data Length :16bytes 1st Channel No. 0nH 2nd Footage [1'] 00 - mmH mm : maximum 3rd [1 1/3'] 00 - mmH 4th [1 3/5'] 00 - mmH 5th [2'] 00 - mmH 6th [2 2/3'] 00 - mmH 7th [4'] 00 - mmH 8th [5 1/3'] 00 - mmH 9th [8'] 00 - mmH 10th [16'] 00 - mmH 11th [Attack 2'] 00 - mmH 12th [Attack 2 2/3'] 00 - mmH 13th [Attack 4'] 00 - mmH 14th Settings [Attack Length] 00 - mmH 15th [Response] 00 - mmH 16th [Attack Mode] 00 - 01H 00H: Each, 01H: First 17th [Wave Variation] 00 - 01H 00H: Sine, 01H: Tone Wheel 18th [Volume] 01 - vvH vv : maximum 19th [aux] 00H 20th [aux] 00H 21th [aux] 00H 22th [aux] 00H sum Check Sum = 0-sum(BULK DATA) TYROS | mm=8 | vv=9	O (Organ Flute)	X	O	O	X	X	O		X	X	O	X

: Transmitted via panel operations

System Exclusive Messages Special Operators (Vocal Harmony Additional Parameters)

[MIDI]

MIDI Event	Data Format	Voice		MIDI Reception (respond/ignore)					MIDI Transmission (generated data)				
		Regular/ Organ Voice	Mic/Vocal Harmony	Song	Right1 Right2 Right3 Left	Keyboard	Style	Extra	Right1 Right2 Right3 Left	M.Pad	Style	Song	Upper Lower
Vocal Harmony Pitch to Note ON/OFF	F0 43 73 01 11 0n 50 00 dd F7 11110000 F0 = Exclusive status 01000011 43 = YAMAHA ID 01110011 73 = Clavinova ID 00000001 01 = Model ID (Clavinova common ID) 00010001 11 = Special Operators 0000nnnn 0n = Channel No. (Always 00) 01010000 50 = Vocal Harmony Additional Parameter Control No. 00000000 00 = Pitch to Note Parameter No. 0ddddddd dd = data (00H : Off, 01H : On) 11110111 F7 = End of Exclusive	X	O			O							
Vocal Harmony Pitch to Note Part	F0 43 73 01 11 0n 50 01 dd F7 11110000 F0 = Exclusive status 01000011 43 = YAMAHA ID 01110011 73 = Clavinova ID 00000001 01 = Model ID (Clavinova common ID) 00010001 11 = Special Operators 0000nnnn 0n = Channel No. (Always 00) 01010000 50 = Vocal Harmony Additional Parameter Control No. 00000001 01 = Pitch to Note Part Parameter No. 0ddddddd dd = data 00H : Right1 01H : Right2 02H : Left 03H : Right3 04H : Upper 11110111 F7 = End of Exclusive	X	O			O							
Vocal Harmony Vocoder Part (Harmony Part(Panel))	F0 43 73 01 11 0n 50 10 dd F7 11110000 F0 = Exclusive status 01000011 43 = YAMAHA ID 01110011 73 = Clavinova ID 00000001 01 = Model ID (Clavinova common ID) 00010001 11 = Special Operators 0000nnnn 0n = Channel No. (Always 00) 01010000 50 = Vocal Harmony Additional Parameter Control No. 00010000 10 = Vocoder Part Parameter No. 0ddddddd dd = data 00H : Off 01H : Upper 02H : Lower 11110111 F7 = End of Exclusive	X	O			O							

: Transmitted via panel operations

System Exclusive Messages (Others)

[MIDI]

MIDI Event	Data Format	Voice		MIDI Reception (respond/ignore)					MIDI Transmission (generated data)				
		Regular/ Organ Voice	Mic/Vocal Harmony	Song	Right1 Right2 Right3 Left	Keyboard	Style	Extra	Right1 Right2 Right3 Left	M.Pad	Style	Song	Upper Lower
MIDI Master Tuning	F0 43 1n 27 30 00 00 0m 0l cc F7 11110000 F0 = Exclusive status 01000011 43 = YAMAHA ID 0001nnnn 1n n= always 0(when transmit), n=0-F(when receive) 00100111 27 = Model ID of TG100 00110000 30 = Address High 00000000 00 = Address Mid 00000000 00 = Address Low 0000mmmm 0m = Master Tune MSB 00001lll 0l = Master Tune LSB 0ccccccc cc = don't care 11110111 F7 = End of Exclusive	O	O			O					X		

■ BLOCK DIAGRAM (TRS-MS01)

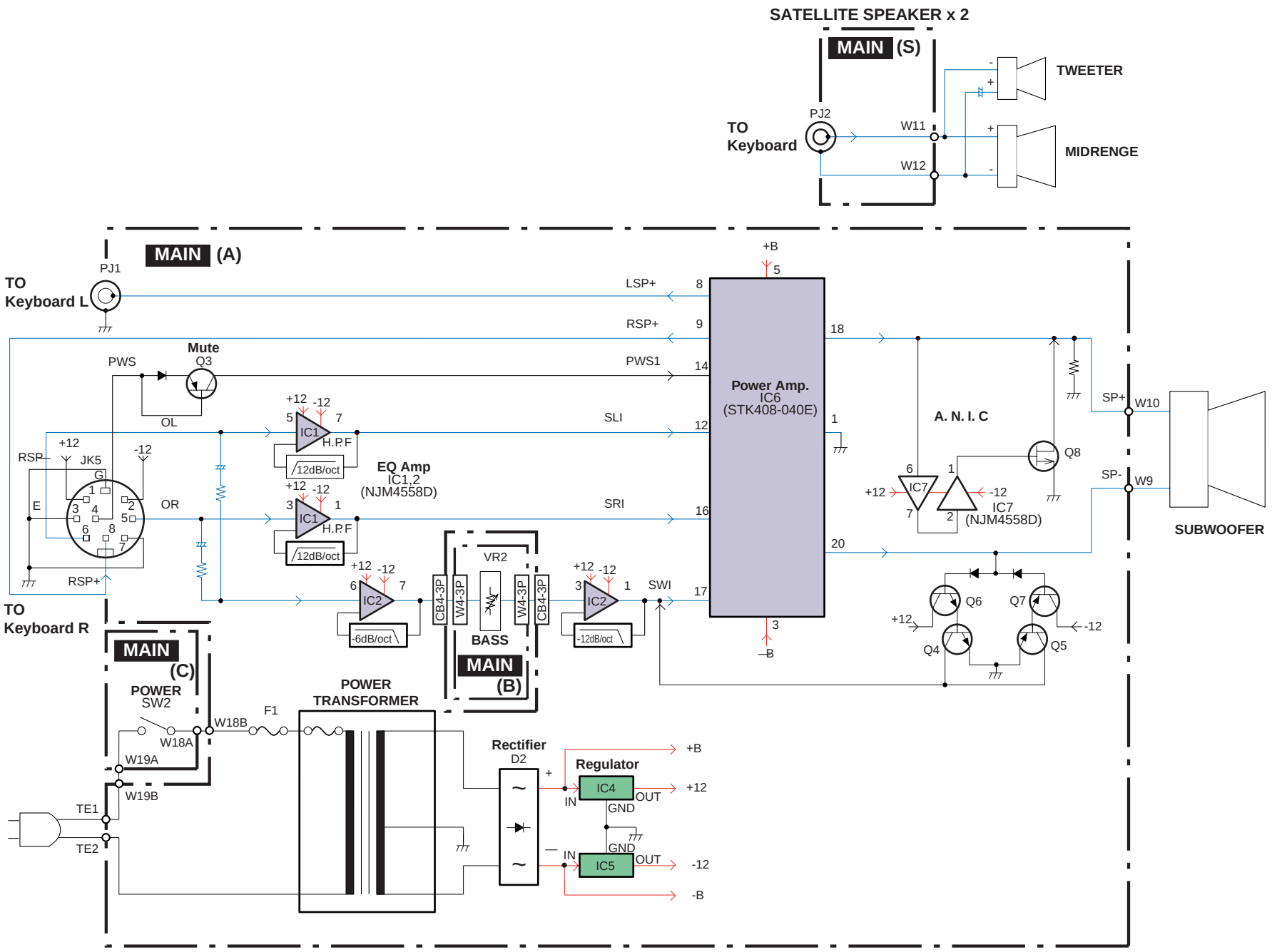

■ OVERALL CIRCUIT DIAGRAM (TRS-MS01)

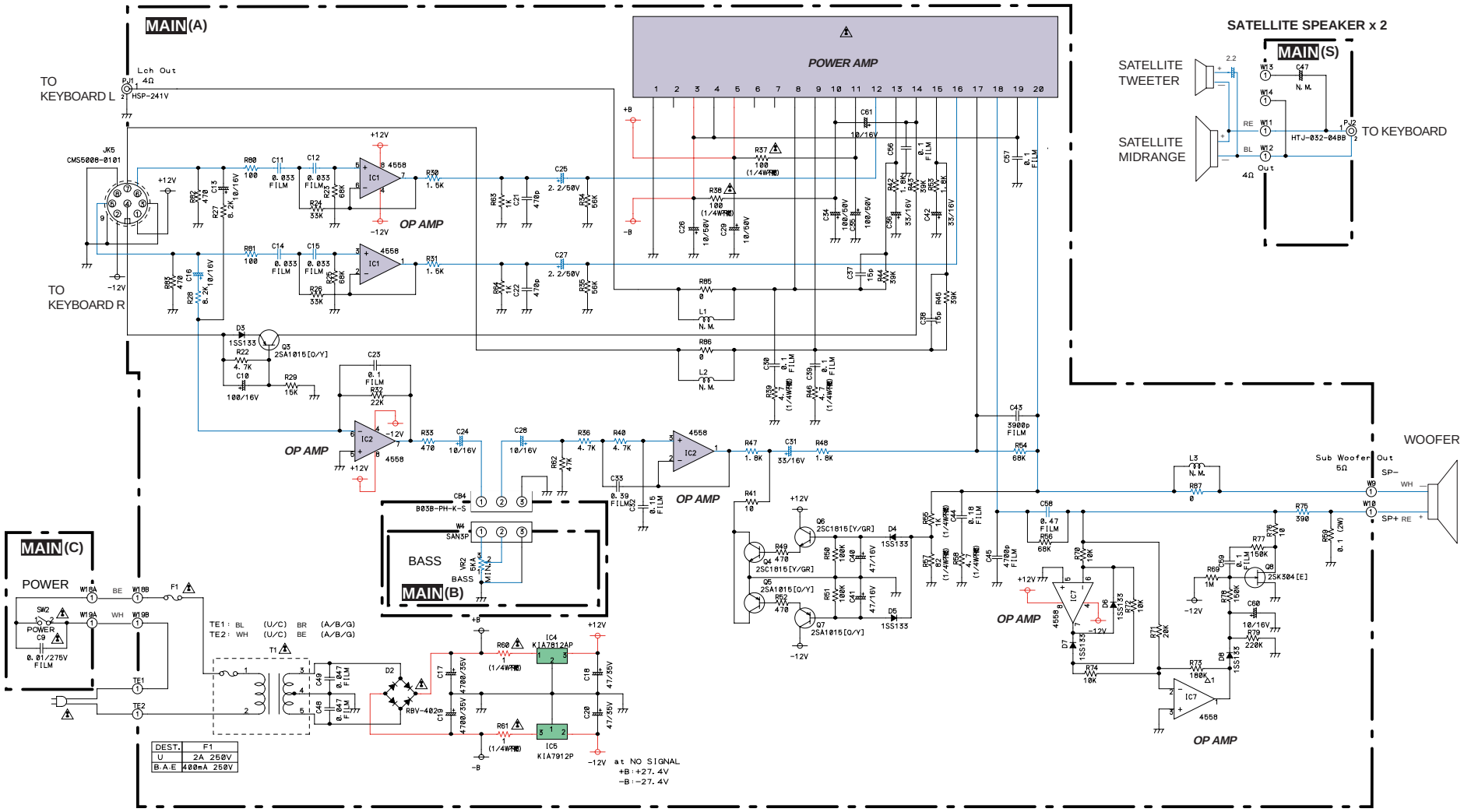

(1/4W不燃): Flame Proof Carbon Res.

DEST.	F1
U	2A 250V
B.A.E	400mA 250V

●**RBV-402 4.0A 200V** (VC971500)
DIODE STACK
MAIN (A): D2

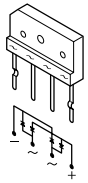

■ **WARNING**
Components having special characteristics are maked ⚠ and must be replaced with parts having specification equal to those originally installed.

Note: See parts list for details of citcuit baord component parts.

DIGITAL WORKSTATION
Tyros

■ **CONTENTS**

OVERALL ASSEMBLY 2
UPPER CASE ASSEMBLY 4
LOWER CASE ASSEMBLY 7
KEYBOARD ASSEMBLY 10
LCD PANEL ASSEMBLY 12
WHEEL ASSEMBLY 14
ELECTRICAL PARTS 15

Note) DESTINATION ABBREVIATIONS

A:	Australian model	O:	Chinese model
B:	British model	Q:	South-east Asia model
C:	Canadian model	T:	Taiwan model
D:	German model	U:	U.S.A. model
E:	European model	V:	General export model (110V)
F:	French model	W:	General export model (220V)
H:	North European model	N,X:	General export model
I:	Indonesian model	Y:	Export model
J:	Japanese model	K:	Korean model
M:	South African model		

■ WARNING

Components having special characteristics are marked ⚠ and must be replaced with parts having specifications equal to those originally installed.

■ The numbers in “QTY” shows quantities for each unit.
■ The parts with “--” in “Part No.” are not available as spare parts.
■ The second letter of the shaded ( ) part number is I, not one.
■ The second letter of the shaded ( ) part number is O, not zero.
■ The mark “ } ” in the remarks column indicates that these parts are interchangeable.

■ OVERALL ASSEMBLY

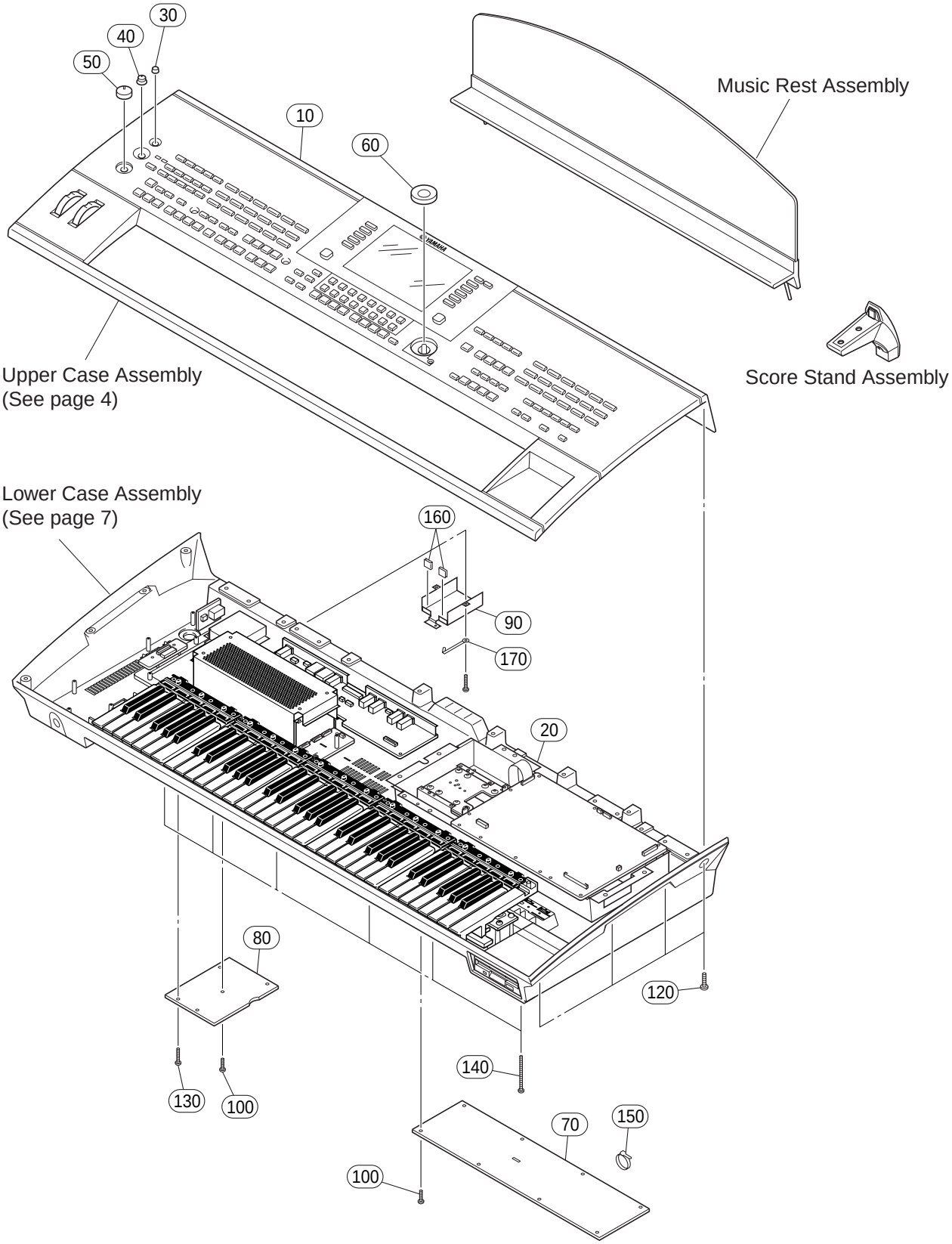

	REF NO.	PART NO.	DESCRIPTION			REMARKS	QTY	RANK
			OVERALL ASSEMBLY			TYROS		
		--	Overall Assembly	PT		(V922540)		
	10	--	Upper Case Assembly			(V922760)		
	20	--	Lower Case Assembly			(V922770)		
	30	V7151200	Push Knob	BLACK		POWER ON/OFF		01
	40	V2300100	Knob			INPUT VOLUME		04
*	50	V9272000	Knob			MASTER VOLUME		
	60	V7761500	Encoder Knob	SILVER		DATA ENTRY		03
*	70	V9270600	Under Cover L					
*	80	V9270700	Under Cover S					
*	90	V9269100	Inlet Lower Box					
	100	VP157800	Bonding Screw	3.0X8 MFZN2BL			9	01
	120	VR138400	Bind Head Tapping Screw-B	4.0X12 MFZN2BL			28	01
	130	VE683000	Bind Head Tapping Screw-B	3.0X12 MFZN2Y			15	01
	140	V7213700	Bind Head Tapping Screw-B	3.0X30 MFZN2Y			6	
	150	CB069250	Cord Holder	BK-1				01
*	160	--	Adhesive Tape	ECT #590S W=15		(ZL35000)		
	170	CB817510	Cord Binder	S-14B				03
			ACCESSORIES					
⚠		V2916900	AC Cord Set	J 2P 7A 2.5m		J		05
⚠		V2917000	AC Cord Set	UC 2P 7A 2.44m		U		06
⚠		V2917100	AC Cord Set	E 2P 2.5m 2.5A		E		05
⚠		VT015700	AC Cord Set	J 2P 2.5m 7A		J		05
⚠		VT015800	AC Cord Set	U 2P 2.44m 7A		U		06
⚠		VT015900	AC Cord Set	E 2P 2.5m		E		05
⚠		VT016000	AC Cord Set	B 2P 2.5m		B		08
		V8464700	Music Rest Assembly					15
*		V9707900	Score Stand Assembly	PK			2	
*		X2877A00	CD-ROM	SOFTWARE				
*		V9279100	USB Cable	YAF11-0915				
			TOOLS					
*		MFA30600	Connector Assembly	FFC2 (30P 600mm)		SERVICE PARTS		
*		WA858300	Connector Assembly	LED (4P 450mm)		SERVICE PARTS		

*: New Parts（新規部品）

RANK: Japan only

■ UPPER CASE ASSEMBLY

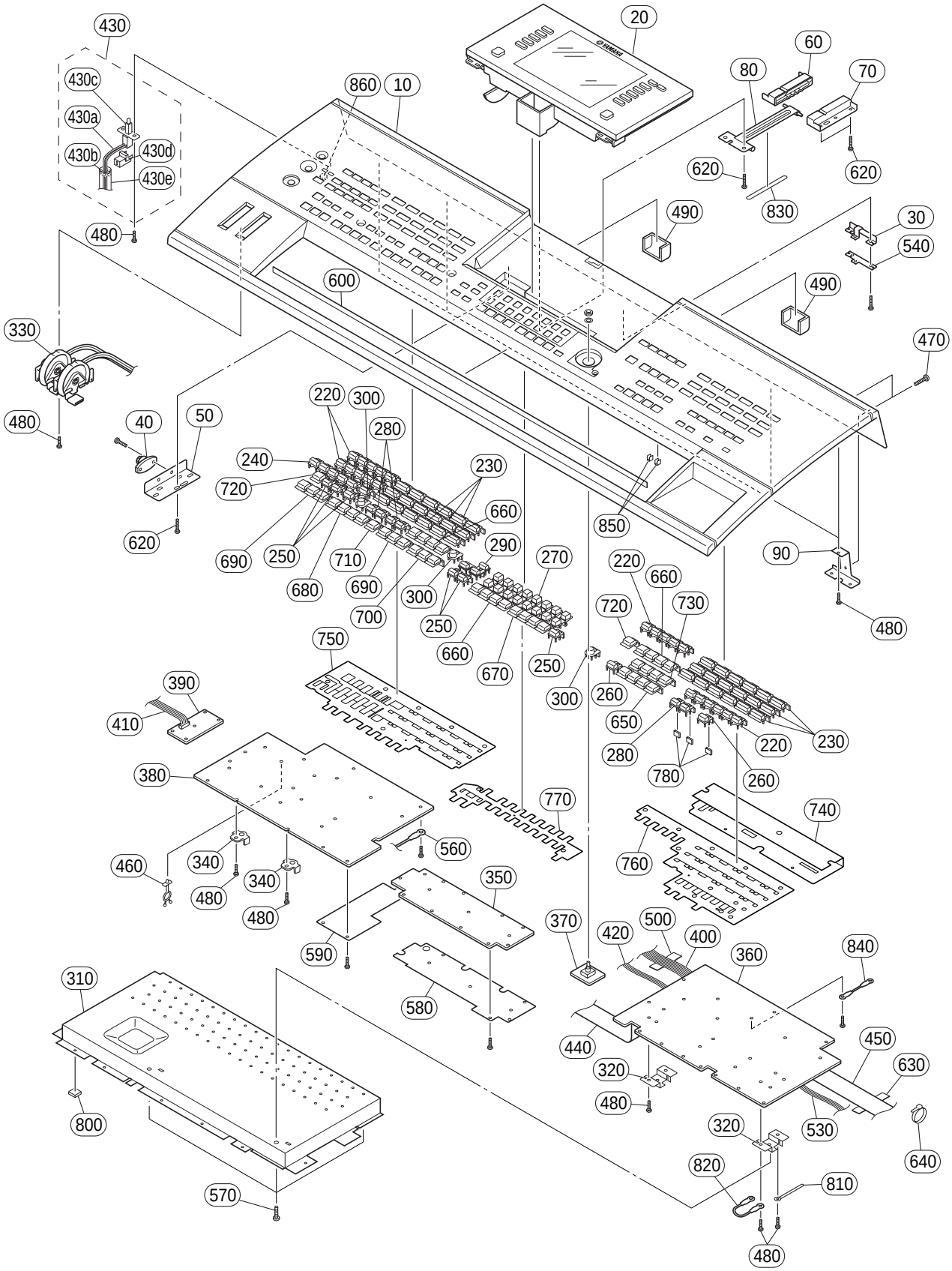

	REF NO.	PART NO.	DESCRIPTION			REMARKS	QTY	RANK
			UPPER CASE ASSEMBLY			TYROS		
		--	Upper Case Assembly			(V922760)		
*	10	V9278800	Upper Case					
*	20	V9227800	LCD Panel Assembly					
	30	--	LCD Lock Plate			(V928800)		
*	40	V9287600	Rotary Damper	PT				
	50	--	Damper Stay			(V927040)		
*	60	V9136600	Stay Guide Molding L	LEFT				
*	70	V9136700	Stay Guide Molding R	RIGHT				
*	80	V9270500	Stay Angle					
	90	--	Stand Support Stay			(V926930)	4	
*	220	V9278100	Panel Button Molded			VOCAL HARMONY,TALK, EFFECT,VH TYPE SELECT, MIC SETTING,SP1,SP2,SP3, SP4,LOOP,DEMO,HELP,	4	
						FUNCTION,SOUND CREATOR, DIGITAL RECORDING, HARMONY ECHO, INITIAL TOUCH,SUSTAIN, POLY/MONO,DSP,		
*	230	V9278200	Panel Button Molded			DSP VARIATION I,IV,POP&ROCK,SWING&JAZZ, LATIN,WORLD,II,V,BALLAD, R&B,BALLROOM PARTY,PRESET III,VI,DANCE,COUNTRY,	6	
						MOVIE&SHOW,USER/DISK, PIANO,STRINGS,TRUMPET, GUITAR,ACCORDION, ORGAN FLUTES,E.PIANO, CHOIR,SAXOPHONE,BASS,PAD,		
*	240	V9278300	Panel Button Molded			CUSTOM VOICE,ORGAN,BRASS, FLUTE/CLARINET, PERC./DRUM KIT,SYNTH,USER FADE IN/OUT,REC,TOP, START/STOP,REW,FF		
*	250	V9117200	Panel Button Molded			OTS LINK,AUTO FILL IN, REGIST. BANK,FREEZE, MEMORY, METRONOME START/STOP	6	
*	260	V9278400	Panel Button Molded			LEFT HOLD,GUIDE	2	
*	270	V9278500	Panel Button Molded			UP (1-8),DOWN (1-8)		
*	280	V9278600	Panel Button Molded			TEMPO (-,+), TRANSPOSE (-,+), UPPER OCTAVE (-,+)	3	
*	290	V9117500	Panel Button Molded			BALANCE,MIXING CONSOLE, CHANNEL ON/OFF		
*	300	V9278700	Panel Button Molded			TAP TEMPO,STOP,ENTER	3	
	310	--	Shield Upper Cover			(V927080)		
	320	--	Shield Cover Stay			(V926920)	2	
	330	--	Wheel Assembly			(V928200)		
*	340	V9348300	MK Attachment				2	
*	350	V9286200	Circuit Board	PNC		(V881100)		
*	360	V9286400	Circuit Board	PNR		(V881080)		
*	370	V9286500	Circuit Board	EN		(V881080)		
*	380	V9285800	Circuit Board	PNL		(V881090)		
*	390	V9285900	Circuit Board	MICVR		(V881090)		
	400	--	Connector Assembly	PNLR		(WA60830)		
	410	--	Connector Assembly	VR1		(WA60840)		
	420	--	Connector Assembly	EN		(WA60820)		
	430	--	Connector Assembly	POWER		(WA60780)		
	430a	--	Connector Assembly	POWER B		(V919670)		
	430b	CB069250	Cord Holder	BK-1			2	01
	430c	VC843500	Push Switch	SDDLB1216A J.U.C.S		POWER ON/OFF		03
⚠	430d	V5800800	Switch Cover	IVORY,BLACK				01
	430e	--	Antivibration Foam	130X40		(WA48580)	2	
*	440	WA120800	Connector Assembly	FFC3				
*	450	WA120700	Connector Assembly	FFC2				
	460	--	Cable Clip	1594-0-0-001		(V927730)		
	470	VG007500	Truss Head Screw	4.0X14 MFCR33			8	01
	480	EP600250	Bind Head Tapping Screw-B	3.0X8 MFZN2Y			88	01
	490	--	Dust Proof Foam	CALMFLEX F-2		(V929030)	2	

*: New Parts（新規部品）

RANK: Japan only

	REF NO.	PART NO.	DESCRIPTION			REMARKS	QTY	RANK
	500	VA126100	Adhesive Tape	12X50			9	03
	530	--	Connector Assembly	LED		(WA61060)		
	540	--	Lock Plate Cover			(V929080)		
	560	--	GND Wire			(WA60860)		
	570	VR138400	Bind Head Tapping Screw-B	4.0X12 MFZN2BL			3	01
	580	--	Protect Sheet C	230 74		(V962150)		
	590	--	Protect Sheet L	161 69		(V962170)		
*	600	V9289500	Keyboard Felt					
	620	VQ074600	Bind Head Tapping Screw-B	3.0X12 MFZN2BL			18	01
	630	--	Adhesive Tape	ECT #590S W=15		(ZL35000)		
*	640	WA602000	Cord Holder	150mm				
*	650	WA298600	Button Assembly	PT		PART ON/OFF		
*	660	WA298700	Button Assembly	PT		MULTI PAD CONTROL (1-4), REGISTRATION MEMORY (1-4) ONE TOUCH SETTING (1-4)	3	
*	670	WA298800	Button Assembly	PT		REGISTRATION MEMORY (5-8)		
*	680	WA298900	Button Assembly	PT		MAIN VARIATION (A-D)		
*	690	WA299000	Button Assembly	PT		INTRO (I,II,III), ENDING/rit. (I,II,III)	2	
*	700	WA299100	Button Assembly	PT		SYNC STOP,SYNC START, START/STOP		
*	710	WA299200	Button Assembly	PT		BREAK		
*	720	WA299300	Button Assembly	PT		ACMP, PROGRAMABLE MUSIC FINDER	2	
*	730	WA299400	Button Assembly	PT		PART SELECT		
	740	--	Shield Sheet	RIGHT		(WA47590)		
	750	--	Antivibration Sheet L			(WA47130)		
	760	--	Antivibration Sheet R			(WA47140)		
	770	--	Antivibration Sheet C			(WA47150)		
	780	--	Dust Proof Cloth	15X15X0.35		(WA50680)	52	
	800	--	Foam	10X10 F-2		(WA47830)	11	
	810	CB817510	Cord Binder	S-14B			4	03
	820	--	GND4 Wire			(WA12580)		
	830	--	Antivibration Foam	25X15		(WA52230)		
	840	--	GND10 Wire			(WA53920)		
	850	--	Dust Proof Cloth	14X6X0.5		(V789860)	12	
	860	--	Spacer			(WA69850)		

*: New Parts（新規部品）

RANK: Japan only

■ LOWER CASE ASSEMBLY

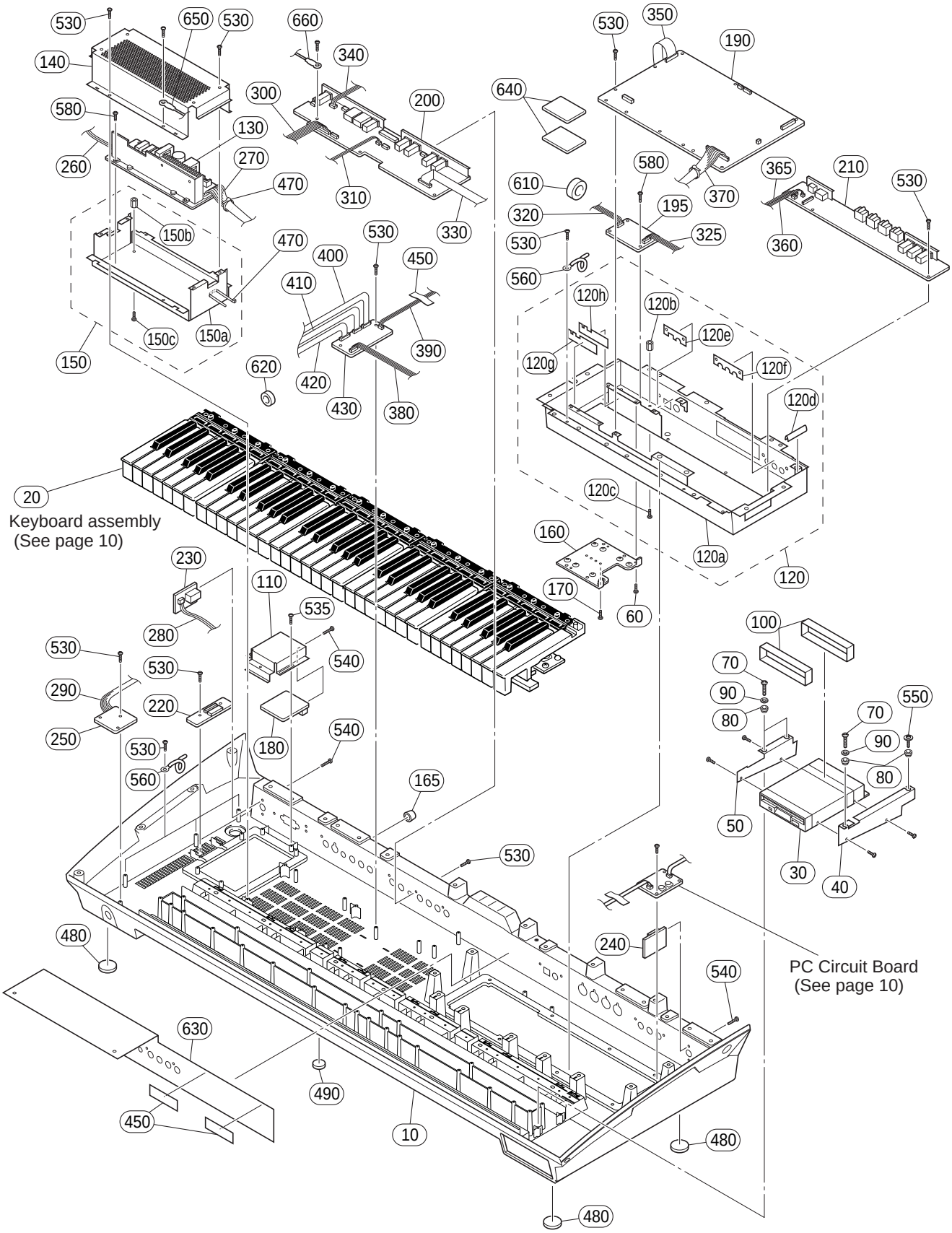

	REF NO.	PART NO.	DESCRIPTION			REMARKS	QTY	RANK
			LOWER CASE ASSEMBLY			TYROS		
		--	Lower Case Assembly			(V922770)		
*	10	V9118700	Lower Case					
	20	--	Keyboard Assembly	16NW C61 P2M		(V928670)		
	30	V6492300	Floppy Disk Drive	ALPS DF354H				13
	40	--	Angle R	RIGHT		(V926860)		
	50	--	Angle L	LEFT		(V926870)		
	60	VK712400	Bonding Head Screw	3.0X6 MFNI33			4	01
	70	VR145600	Bind Head Tapping Screw-B	A4.0X16 MFZN2BL			3	01
	80	VA121600	Bushing				4	01
	90	VK431100	FDD Spacer				3	01
	100	--	Adhesive Tape	ECT #590S W=15		(ZL35000)		
	110	--	Inlet Upper Box			(V926900)		
	120	--	Shield Lower Cover Ass'y			(V991900)		
	120a	--	Shield Lower Cover			(V927090)		
	120b	--	Spacer	BRASS		(V942390)	4	
	120c	VK712400	Bonding Head Screw	3.0X6 MFNI33			4	01
	120d	--	Adhesive Tape	ECT #590S W=15		(ZL35000)		
	120e	--	Insulation Film A	S10		(WA47850)		
	120f	--	Insulation Film B	S10		(WA47860)		
	120g	--	Spacer Film F			(WA47310)		
	120h	--	Spacer Film R			(WA47320)		
	130	V5557500	Power Supply Unit	CE,U,CS				20
	140	--	AC Upper Frame			(V926880)		
	150	--	AC Lower Frame Assembly			(V926890)		
	150a	--	AC Lower Frame			(V942400)		
	150b	--	Spacer	BRASS		(V942390)	4	
	150c	VK712400	Bonding Head Screw	3.0X6 MFNI33			4	01
	160	V3877400	Angle Bracket, HDD					04
	165	V2300100	Knob			MIC/LINE IN (TRIM)		04
	170	VG048000	Bind Head Screw	3.0X4 MFNI33			4	01
*	180	V9285300	Circuit Board	INLET		(V895040)		
*	190	V8923800	Circuit Board	DM				
*	195	V9640900	Circuit Board	REG		(V964100)		
*	200	V8819100	Circuit Board	AJACK		(V879930)		
*	210	V8819300	Circuit Board	DJACK		(V881320)		
*	220	V9286600	Circuit Board	MICVRSUB		(V895040)		
*	230	V9285400	Circuit Board	SPOUTL		(V895040)		
*	240	V9285500	Circuit Board	SPOUTR		(V895040)		
*	250	V9285600	Circuit Board	PHONES		(V895040)		
	260	--	Connector Assembly	INLET		(WA60900)		
	270	--	Connector Assembly	SW		(WA60890)		
	280	--	Connector Assembly	SPL		(V919700)		
	290	--	Connector Assembly	HP		(WA60810)		
	300	--	Connector Assembly	VR2		(V926360)		
	310	--	Connector Assembly	FDD1		(V919790)		
	320	--	Connector Assembly	POW		(WA61040)		
	325	--	Connector Assembly	POW2		(V962540)		
*	330	WA120900	Connector Assembly	FFC4				
	340	--	Connector Assembly	SPR		(WA60940)		
*	350	WA121000	Connector Assembly	FFC5				
	360	--	Connector Assembly	VIDEO		(WA61010)		
	365	--	Connector Assembly	USB1		(WA61080)		
*	370	WA120200	Connector Assembly	FDD				
	380	--	Connector Assembly	MKS		(WA60990)		
*	390	V9197600	Connector Assembly	PC				
	400	--	Wiring Assembly	MK2		(V919630)		
	410	--	Wiring Assembly	MK3		(V919640)		
	420	--	Wiring Assembly	MK4		(V919650)		
*	430	V8946100	Circuit Board	EMKS-N		(V894600)		
	450	VA126100	Adhesive Tape	12X50			15	03
	460	CB040540	Cord Binder	S-72B L=50				01
	470	CB069250	Cord Holder	BK-1			8	01
*	480	V9281800	Foot	T1.6			4	
	490	CB043750	Foot	T1.6 BLACK				01
	530	EP600250	Bind Head Tapping Screw-B	3.0X8 MFZN2Y			25	01
	535	VE683000	Bind Head Tapping Screw-B	3.0X12 MFZN2Y			6	01
	540	EP600140	Bind Head Tapping Screw-B	3.0X10 MFZN2BL			23	01
	550	V5115200	Sems Pan Head Screw	3.0X10				01
	560	CB817510	Cord Binder	S-14B			12	03

*: New Parts **（新規部品）**

RANK: Japan only

REF NO.	PART NO.	DESCRIPTION			REMARKS	QTY	RANK
580	**EG330040**	Bind Head Screw	3.0X6 MFZN2Y			12	01
610	--	Ferrite Core	K1 NF - 80(N)		(V984770)		
620	--	Ferrite Core	L1 NFR - 12		(V984800)		
630	--	Shield Sheet L	LEFT		(WA47600)		
640	--	Antivibration Foam	50X50 F-2		(WA48530)	4	
650	--	GND3 Wire			(WA12570)		
660	--	GND9 Wire			(WA53110)		

*: New Parts **（新規部品）**

RANK: Japan only

■ KEYBOARD ASSEMBLY

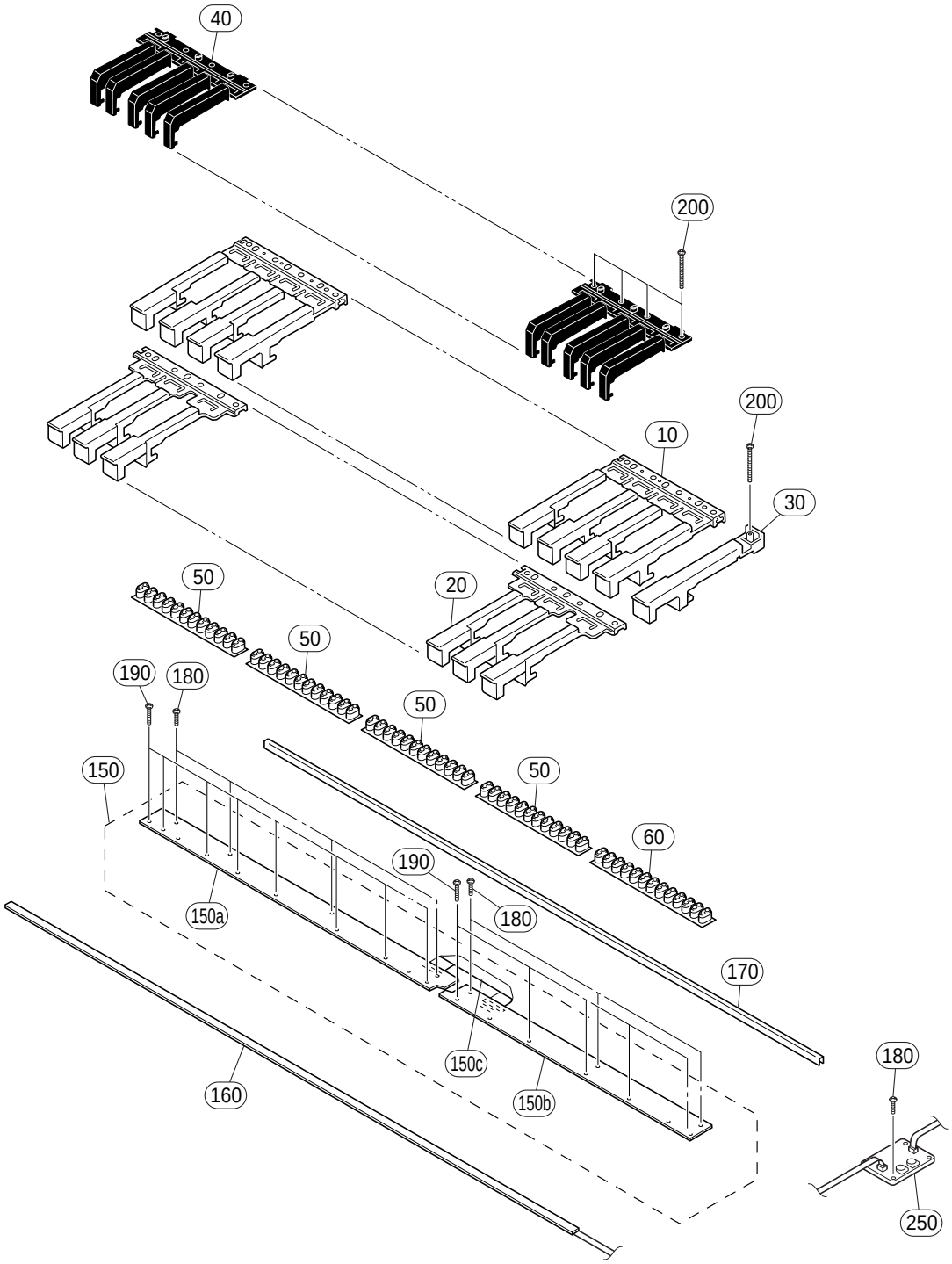

	REF NO.	PART NO.	DESCRIPTION			REMARKS	QTY	RANK
			KEYBOARD ASSEMBLY			TYROS		
		--	Keyboard Assembly	16NW C61 P2M		(V928670)		
*	10	V9338500	White Key	16N-W C,E,G,B			5	
*	20	V9338600	White Key	16N-W D,F,A			5	
*	30	V9339200	White Key	16N-W C'				
	40	VZ271700	Black Key	16N			5	06
	50	V3413600	Rubber Contact	16N-2M OCT 2M		C1-B1,C2-B2,C3-B3,C4-B4	4	04
	60	V7477400	Rubber Contact	16N-2M 13K 2M		C5-C6		04
	150	--	MK Circuit Board Assembly	16N2M C61-W P2		(V934010)		
	150a	V8695300	Circuit Board	61L		(V869520)		
	150b	V8695500	Circuit Board	61H		(V869540)		
	150c	V8696200	Connector Assembly	16N-2M-C61 210				01
*	150d	V9340000	Stopper 61U	836X5X3.5T				
*	160	V9357100	PC Sensor	YMHM-017 MK-DLSL				10
	170	V7100100	Rubber Support	16N				03
	180	EP600250	Bind Head Tapping Screw-B	3.0X8 MFZN2Y			11	01
	190	VZ313100	Bind Head Tapping Screw-P	SP 3.0X12 MFZNBL			13	01
	200	VT069800	Bind Head Tapping Screw-P	3.0X20 MFZN2			21	01
*	250	V8947700	Circuit Board	PC		(V894760)		

*: New Parts（新規部品）

RANK: Japan only

■ LCD PANEL ASSEMBLY

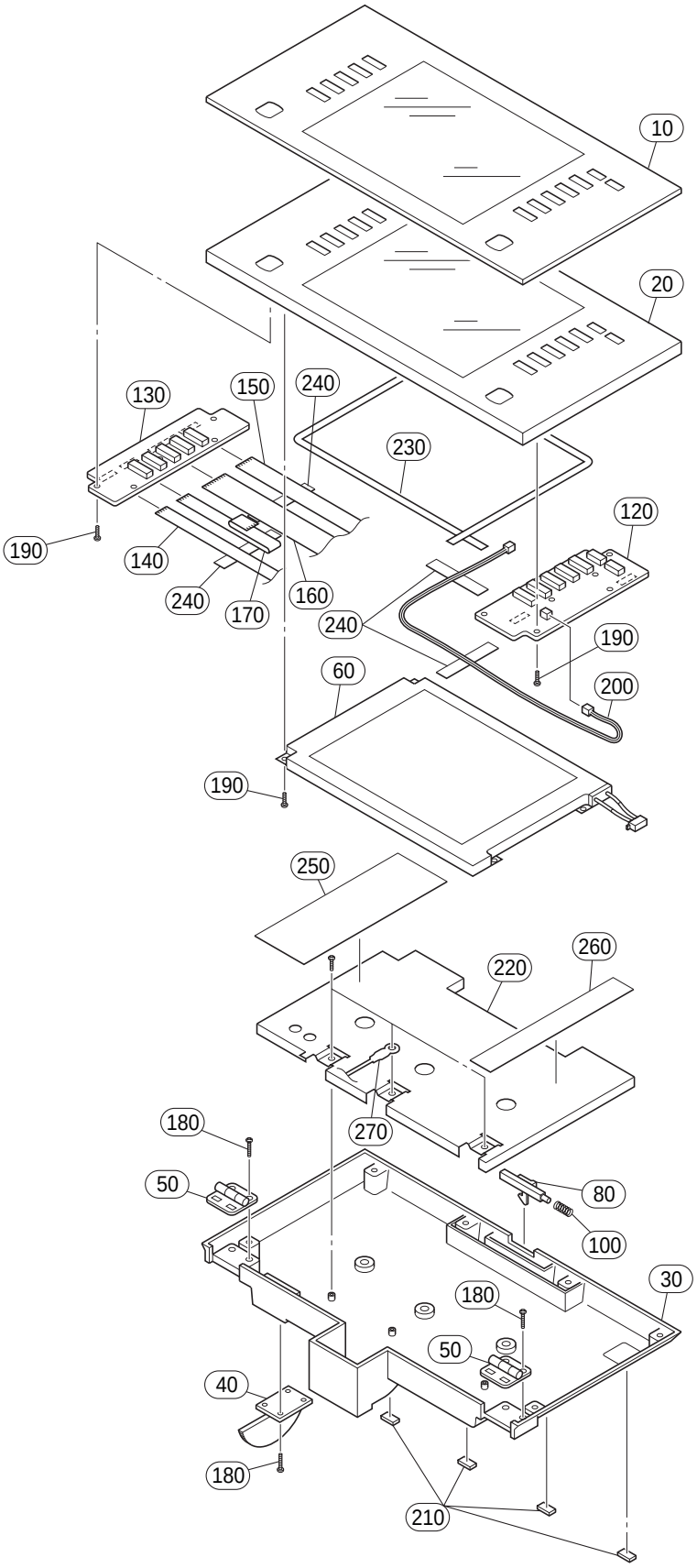

	REF NO.	PART NO.	DESCRIPTION			REMARKS	QTY	RANK
			LCD PANEL ASSEMBLY			TYROS		
*		V9227800	LCD Panel Assembly					
*	10	V9227900	LCD Cover					
*	20	V9228000	LCD Upper Case					
*	30	V9135000	LCD Lower Case					
*	40	V9135400	Gear					
*	50	V9271500	Hinge				2	
	60	V7182100	LCD	EDMGRB8KMF				52
*	80	V9292000	LCD Hook Holder					
*	100	V9288200	Return Spring					
*	120	V9286000	Circuit Board	LCR		(V881120)		
*	130	V9286100	Circuit Board	LCL		(V881120)		
*	140	MFA09250	Connector Assembly	9P 250mm P=1.0				
*	150	WA121100	Connector Assembly	FFC6				
*	160	WA120600	Connector Assembly	FFC1				
*	170	V9198800	Connector Assembly	20P L=130 P=0.5				
	180	VQ074600	Bind Head Tapping Screw-B	3.0X12 MFZN2BL			16	01
	190	EP600250	Bind Head Tapping Screw-B	3.0X8 MFZN2Y			18	01
	200	--	Connector Assembly	INV		(WA60850)		
*	210	V9348100	Foot	T2.0			4	
	220	--	LCD Support Stay			(V934860)		
	230	--	Dust Proof Foam	CALMFLEX F-2		(V942430)		
	240	VN195400	Adhesive Tape	12X70			4	03
	250	--	Insulation Film L	S10 LEFT		(V942440)		
	260	--	Insulation Film R	S10 RIGHT		(V942450)		
	270	--	GND2 Wire			(WA60870)		

*: New Parts（新規部品）

RANK: Japan only

■ WHEEL ASSEMBLY

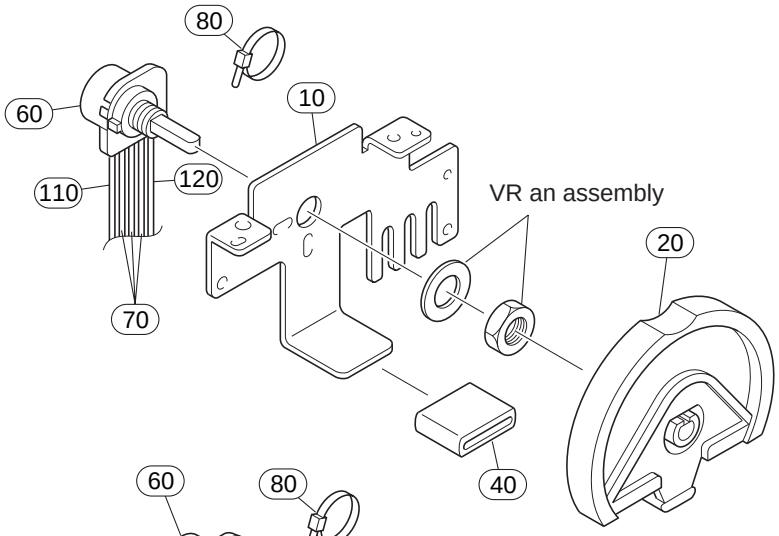

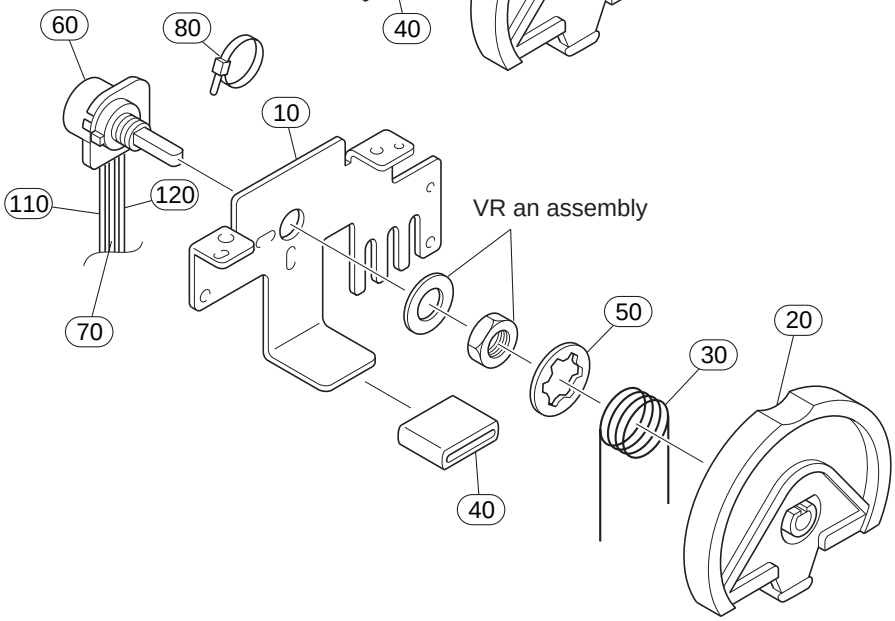

	REF NO.	PART NO.	DESCRIPTION			REMARKS	QTY	RANK
			WHEEL ASSEMBLY			TYROS		
		--	Wheel Assembly			(V928200)		
	10	--	Frame			(V453380)	2	
	20	**V4579900**	Wheel			PITCH BEND,MODULATION	2	04
	30	**VC792800**	Spring					01
	40	**CB819020**	Wheel Tube				2	04
	50	**EW600110**	Stop Ring	12.0				01
	60	**VT695100**	Rotary Variable Resistor	10.0K RK163111		PITCH BEND,MODULATION	2	03
*	70	**WA607900**	Connector Assembly	WL				
	80	**CB069250**	Cord Holder	BK-1			2	01
	110	--	Vinyl Wire	BLACK		(VK88170)		
	120	--	Vinyl Wire	RED		(VK88160)		

*: New Parts **（新規部品）**

RANK: Japan only

■ ELECTRICAL PARTS

	REF NO.	PART NO.	DESCRIPTION			REMARKS	QTY	RANK
			ELECTRICAL PARTS					
		V8695500	Circuit Board	61H		(V869540)(X2335B0)		04
		V8695300	Circuit Board	61L		(V869520)(X2336A0)		04
*		V8819100	Circuit Board	AJACK		(V879930)(X2509D0)		
*		V8819300	Circuit Board	DJACK		(V881320)(X2510C0)		
*		V8923800	Circuit Board	DM		(X2584D0)		
*		V8946100	Circuit Board	EMKS-N		(V894600)(X2610C0)		
*		V9286500	Circuit Board	EN		(V881080)(X2500E0)		
*		V9285300	Circuit Board	INLET		(V895040)(X2621C0)		
*		V9286100	Circuit Board	LCL		(V881120)(X2503D0)		
*		V9286000	Circuit Board	LCR		(V881120)(X2503D0)		
*		V9285900	Circuit Board	MICVR		(V881090)(X2501E0)		
*		V9286600	Circuit Board	MICVRSUB		(V895040)(X2621C0)		
*		V8947700	Circuit Board	PC		(V894760)(X2612B0)		
*		V9285600	Circuit Board	PHONES		(V895040)(X2621C0)		
*		V9286200	Circuit Board	PNC		(V881100)(X2502C0)		
*		V9285800	Circuit Board	PNL		(V881090)(X2501E0)		
*		V9286400	Circuit Board	PNR		(V881080)(X2500E0)		
*		V9640900	Circuit Board	REG		(V964100)(X3184A0)		
*		V9285400	Circuit Board	SPOUTL		(V895040)(X2621C0)		
*		V9285500	Circuit Board	SPOUTR		(V895040)(X2621C0)		
		V8695500	Circuit Board	61H		(V869540)(X2335B0)		04
	10	--	Masking Tape	#2901 W=15		(VQ76950)		
	CN01	VK025600	Wire Trap	52147 12P TE				01
	CN02	VK024900	Wire Trap	52147 5P TE				01
	CN03	VK025600	Wire Trap	52147 12P TE				01
	D073	VV437800	Diode	1N4148(DO-34)				01
	-122	VV437800	Diode	1N4148(DO-34)				01
		V8695300	Circuit Board	61L		(V869520)(X2336A0)		04
	10	--	Masking Tape	#2901 W=15		(VQ76950)		
	CN04	VK025600	Wire Trap	52147 12P TE				01
	CN05	VK025100	Wire Trap	52147 7P TE				01
	D006	VV437800	Diode	1N4148(DO-34)				01
	-072	VV437800	Diode	1N4148(DO-34)				01
*		V8819100	Circuit Board	AJACK		(V879930)(X2509D0)		
	MFAL	--	AML JACK Angle			(V927110)		
	MFAR	--	AMR JACK Angle			(V927120)		
	C0001	US145100	Ceramic Capacitor-F (chip)	0.1000 25V Z				01
	C0002	US145100	Ceramic Capacitor-F (chip)	0.1000 25V Z				01
	C0003	UR848470	Electrolytic Cap.	470.00 25.0V				01
	C0004	US145100	Ceramic Capacitor-F (chip)	0.1000 25V Z				01
	C0005	UR739330	Electrolytic Cap.	3300 16.0V				01
	C0006	UR838100	Electrolytic Cap.	100.00 16.0V				01
	C0007	US145100	Ceramic Capacitor-F (chip)	0.1000 25V Z				01
	C0008	US145100	Ceramic Capacitor-F (chip)	0.1000 25V Z				01
	C0009	V6490000	Monolithic Ceramic Cap.	1.000 25V Z				01
	C0010	US145100	Ceramic Capacitor-F (chip)	0.1000 25V Z				01
	C0011	US145100	Ceramic Capacitor-F (chip)	0.1000 25V Z				01
	C0012	UR866100	Electrolytic Cap.	1.00 50.0V				01
	C0013	UR837220	Electrolytic Cap.	22.00 16.0V				01
	C0014	US145100	Ceramic Capacitor-F (chip)	0.1000 25V Z				01
	C0015	US062100	Ceramic Capacitor-SL(chip)	100P 50V J				01
	C0016	UN847470	Electrolytic Cap.-BP	47.00 25.0V				01
	C0017	US062220	Ceramic Capacitor-SL(chip)	220P 50V J				01
	C0018	UR866100	Electrolytic Cap.	1.00 50.0V				01
	C0019	US145100	Ceramic Capacitor-F (chip)	0.1000 25V Z				01
	C0020	UR847470	Electrolytic Cap.	47.00 25.0V				01
	C0021	UR865330	Electrolytic Cap.	0.33 50.0V				
	C0022	UN866470	Electrolytic Cap.-BP	4.70 50.0V				01
	C0023	UN866470	Electrolytic Cap.-BP	4.70 50.0V				01
	C0024	UR848220	Electrolytic Cap.	220.00 25.0V				01
	C0025	US061270	Ceramic Capacitor-CH(chip)	27P 50V J				01
	C0026	US061270	Ceramic Capacitor-CH(chip)	27P 50V J				01
	C0027	US145100	Ceramic Capacitor-F (chip)	0.1000 25V Z				01
	C0028	US145100	Ceramic Capacitor-F (chip)	0.1000 25V Z				01
	C0029	UR865470	Electrolytic Cap.	0.47 50.0V				01
	C0030	UN866470	Electrolytic Cap.-BP	4.70 50.0V				01

*: New Parts

RANK: Japan only

REF NO.	PART NO.	DESCRIPTION			REMARKS	QTY	RANK
C0031	UN866470	Electrolytic Cap.-BP	4.70 50.0V				01
C0032	US145100	Ceramic Capacitor-F (chip)	0.1000 25V Z				01
C0033	US145100	Ceramic Capacitor-F (chip)	0.1000 25V Z				01
C0034	US063220	Ceramic Capacitor-B (chip)	2200P 50V K				01
C0035	US063220	Ceramic Capacitor-B (chip)	2200P 50V K				01
C0036	UR838100	Electrolytic Cap.	100.00 16.0V				01
C0038	US145100	Ceramic Capacitor-F (chip)	0.1000 25V Z				01
C0039	US145100	Ceramic Capacitor-F (chip)	0.1000 25V Z				01
C0040	UN866470	Electrolytic Cap.-BP	4.70 50.0V				01
-0043	UN866470	Electrolytic Cap.-BP	4.70 50.0V				01
C0044	US145100	Ceramic Capacitor-F (chip)	0.1000 25V Z				01
C0045	US145100	Ceramic Capacitor-F (chip)	0.1000 25V Z				01
C0046	UN866470	Electrolytic Cap.-BP	4.70 50.0V				01
C0047	UN866470	Electrolytic Cap.-BP	4.70 50.0V				01
C0048	US145100	Ceramic Capacitor-F (chip)	0.1000 25V Z				01
-0051	US145100	Ceramic Capacitor-F (chip)	0.1000 25V Z				01
C0052	UN866470	Electrolytic Cap.-BP	4.70 50.0V				01
C0053	UN866470	Electrolytic Cap.-BP	4.70 50.0V				01
C0054	US061470	Ceramic Capacitor-CH(chip)	47P 50V J				01
C0055	US061470	Ceramic Capacitor-CH(chip)	47P 50V J				01
C0056	US061560	Ceramic Capacitor-CH(chip)	56P 50V J				01
-0059	US061560	Ceramic Capacitor-CH(chip)	56P 50V J				01
C0060	UN866470	Electrolytic Cap.-BP	4.70 50.0V				01
-0065	UN866470	Electrolytic Cap.-BP	4.70 50.0V				01
C0066	US062120	Ceramic Capacitor-SL(chip)	120P 50V J				01
C0067	US062120	Ceramic Capacitor-SL(chip)	120P 50V J				01
C0068	US145100	Ceramic Capacitor-F (chip)	0.1000 25V Z				01
C0069	US145100	Ceramic Capacitor-F (chip)	0.1000 25V Z				01
C0070	UN848100	Electrolytic Cap.-BP	100.00 25.0V				01
C0071	UN848100	Electrolytic Cap.-BP	100.00 25.0V				01
C0072	US063100	Ceramic Capacitor-B (chip)	1000P 50V K				01
C0073	US063100	Ceramic Capacitor-B (chip)	1000P 50V K				01
C0074	UN866470	Electrolytic Cap.-BP	4.70 50.0V				01
C0075	UN866470	Electrolytic Cap.-BP	4.70 50.0V				01
C0076	US063100	Ceramic Capacitor-B (chip)	1000P 50V K				01
-0081	US063100	Ceramic Capacitor-B (chip)	1000P 50V K				01
C0082	US064100	Ceramic Capacitor-B (chip)	0.0100 50V K				01
C0083	US064100	Ceramic Capacitor-B (chip)	0.0100 50V K				01
C0084	UR837220	Electrolytic Cap.	22.00 16.0V				01
C0085	US063100	Ceramic Capacitor-B (chip)	1000P 50V K				01
C0086	US063100	Ceramic Capacitor-B (chip)	1000P 50V K				01
CN001	LB932090	Base Post Connector	VH- 9P TE				01
CN002	LB918020	Base Post Connector	XH 2P TE				01
CN003	LB918040	Base Post Connector	XH 4P TE				01
CN004	VZ479500	Connector , FFC	52806 24P TE				01
CN005	VE352600	Connector Base Post	PH-14P TE				01
CN006	LB932020	Base Post Connector	VH- 2P TE				01
CN007	LB932030	Base Post Connector	VH- 3P TE				01
CN008	VB390200	Connector Base Post	PH- 6P TE				01
D0001	VT332900	Diode	1SS355 TE-17				01
-0009	VT332900	Diode	1SS355 TE-17				01
FT001	IE102620	FET	2SK246 Y				01
FT002	IE102620	FET	2SK246 Y				01
G0003	--	GND5 Wire			(WA12590)		
G0004	--	GND8 Wire			(WA12620)		
G0005	--	Vinyl Wire			(WA47340)		
G0006	--	Vinyl Wire			(WA53080)		
IC001	XF291A00	IC	UPC4570G2		OP AMP		03
-003	XF291A00	IC	UPC4570G2		OP AMP		03
IC004	XT131A00	IC	LA6517M-TE-R		OP AMP		04
IC005	XF291A00	IC	UPC4570G2		OP AMP		03
IC006	XF291A00	IC	UPC4570G2		OP AMP		03
IC007	XE470A00	IC	M51132L		VCA		04
JK001	LB101870	Phone Jack	YKB21-5006		MIC/LINE IN (INPUT)		03
JK002	VB312600	Phone Jack	YKB21-5012 BLACK		TO SUB WOOFER (L)		02
JK003	VV881000	Mini Jack	8P CMS5008-0101		TO SUB WOOFER (R)		05
JK004	LB101870	Phone Jack	YKB21-5006		LOOP SEND (L/L+R)		03
JK005	VB312600	Phone Jack	YKB21-5012 BLACK		LOOP SEND (R)		02
JK006	VB312600	Phone Jack	YKB21-5012 BLACK		AUX IN/LOOP RETURN(L/L+R)		02
JK007	VB312600	Phone Jack	YKB21-5012 BLACK		AUX IN/LOOP RETURN (R)		02

*: New Parts

RANK: Japan only

REF NO.	PART NO.	DESCRIPTION			REMARKS	QTY	RANK
JK008	**VC687500**	Phone Jack	YKB21-5014 BLACK		LINE OUT MAIN (L/L+R)		01
JK009	**VB312600**	Phone Jack	YKB21-5012 BLACK		LINE OUT MAIN (R)		02
JK010	**LB101870**	Phone Jack	YKB21-5006		LINE OUT SUB (1)		03
JK011	**LB101870**	Phone Jack	YKB21-5006		LINE OUT SUB (2)		03
L0001	**GE300670**	Ferrite Bead	BL02RN2-R62T4				02
-0005	**GE300670**	Ferrite Bead	BL02RN2-R62T4				02
L0006	**VF456600**	Coil	SBT-0180W				03
L0007	**GE300670**	Ferrite Bead	BL02RN2-R62T4				02
-0011	**GE300670**	Ferrite Bead	BL02RN2-R62T4				02
L0012	**VB835000**	Coil	FL5R200QNT				01
-0021	**VB835000**	Coil	FL5R200QNT				01
L0022	**GE300670**	Ferrite Bead	BL02RN2-R62T4				02
L0023	**VF456600**	Coil	SBT-0180W				03
L0024	**VF456600**	Coil	SBT-0180W				03
L0025	**VB835000**	Coil	FL5R200QNT				01
L0026	**GE300670**	Ferrite Bead	BL02RN2-R62T4				02
R0001	**RD355100**	Carbon Resistor (chip)	100.0 63M J				01
R0002	**RD355470**	Carbon Resistor (chip)	470.0 63M J				01
R0003	**RD358100**	Carbon Resistor (chip)	100.0K 63M J				01
R0004	**RD356100**	Carbon Resistor (chip)	1.0K 63M J				01
R0005	**RD358560**	Carbon Resistor (chip)	560.0K 63M J				01
R0006	**RD357100**	Carbon Resistor (chip)	10.0K 63M J				01
R0007	**RD358100**	Carbon Resistor (chip)	100.0K 63M J				01
R0008	**RD357100**	Carbon Resistor (chip)	10.0K 63M J				01
R0009	**RD358560**	Carbon Resistor (chip)	560.0K 63M J				01
R0010	**RD357100**	Carbon Resistor (chip)	10.0K 63M J				01
R0011	**RD357100**	Carbon Resistor (chip)	10.0K 63M J				01
R0012	**RD356470**	Carbon Resistor (chip)	4.7K 63M J				01
R0013	**RD357100**	Carbon Resistor (chip)	10.0K 63M J				01
R0014	**RD357330**	Carbon Resistor (chip)	33.0K 63M J				01
R0015	**RD356470**	Carbon Resistor (chip)	4.7K 63M J				01
R0016	**RD355100**	Carbon Resistor (chip)	100.0 63M J				01
R0017	**RD357330**	Carbon Resistor (chip)	33.0K 63M J				01
R0018	**RD357820**	Carbon Resistor (chip)	82.0K 63M J				01
R0019	**RD357330**	Carbon Resistor (chip)	33.0K 63M J				01
R0020	**RD357820**	Carbon Resistor (chip)	82.0K 63M J				01
R0021	**RD355150**	Carbon Resistor (chip)	150.0 63M J				01
R0022	**RD357100**	Carbon Resistor (chip)	10.0K 63M J				01
R0023	**RD357100**	Carbon Resistor (chip)	10.0K 63M J				01
R0024	**RD355470**	Carbon Resistor (chip)	470.0 63M J				01
R0025	**RD357100**	Carbon Resistor (chip)	10.0K 63M J				01
R0026	**RD355470**	Carbon Resistor (chip)	470.0 63M J				01
R0027	**RD358100**	Carbon Resistor (chip)	100.0K 63M J				01
R0028	**RD357120**	Carbon Resistor (chip)	12.0K 63M J				01
R0029	**RD357820**	Carbon Resistor (chip)	82.0K 63M J				01
R0030	**RD357820**	Carbon Resistor (chip)	82.0K 63M J				01
R0031	**RD355100**	Carbon Resistor (chip)	100.0 63M J				01
R0032	**RD355100**	Carbon Resistor (chip)	100.0 63M J				01
R0033	**RD357680**	Carbon Resistor (chip)	68.0K 63M J				01
R0034	**RD356470**	Carbon Resistor (chip)	4.7K 63M J				01
R0035	**RD357100**	Carbon Resistor (chip)	10.0K 63M J				01
-0038	**RD357100**	Carbon Resistor (chip)	10.0K 63M J				01
R0039	**RD357270**	Carbon Resistor (chip)	27.0K 63M J				01
R0040	**RD357270**	Carbon Resistor (chip)	27.0K 63M J				01
R0041	**RD357100**	Carbon Resistor (chip)	10.0K 63M J				01
R0042	**RD357100**	Carbon Resistor (chip)	10.0K 63M J				01
R0043	**RD357220**	Carbon Resistor (chip)	22.0K 63M J				01
R0044	**RD357220**	Carbon Resistor (chip)	22.0K 63M J				01
R0045	**RD357180**	Carbon Resistor (chip)	18.0K 63M J				01
-0048	**RD357180**	Carbon Resistor (chip)	18.0K 63M J				01
R0049	**RD357100**	Carbon Resistor (chip)	10.0K 63M J				01
R0050	**RD357100**	Carbon Resistor (chip)	10.0K 63M J				01
R0051	**RD357180**	Carbon Resistor (chip)	18.0K 63M J				01
R0052	**RD357180**	Carbon Resistor (chip)	18.0K 63M J				01
R0053	**RD357100**	Carbon Resistor (chip)	10.0K 63M J				01
-0058	**RD357100**	Carbon Resistor (chip)	10.0K 63M J				01
R0059	**RD355680**	Carbon Resistor (chip)	680.0 63M J				01
-0062	**RD355680**	Carbon Resistor (chip)	680.0 63M J				01
R0063	**RD356100**	Carbon Resistor (chip)	1.0K 63M J				01
-0066	**RD356100**	Carbon Resistor (chip)	1.0K 63M J				01

*: New Parts

RANK: Japan only

	REF NO.	PART NO.	DESCRIPTION			REMARKS	QTY	RANK
	R0067	RD354330	Carbon Resistor (chip)	33.0 63M J				01
	R0068	RD354330	Carbon Resistor (chip)	33.0 63M J				01
	R0069	RD357100	Carbon Resistor (chip)	10.0K 63M J				01
	R0070	RD357100	Carbon Resistor (chip)	10.0K 63M J				01
	R0071	RD356100	Carbon Resistor (chip)	1.0K 63M J				01
	R0072	RD357100	Carbon Resistor (chip)	10.0K 63M J				01
	-0075	RD357100	Carbon Resistor (chip)	10.0K 63M J				01
	R0076	RD356100	Carbon Resistor (chip)	1.0K 63M J				01
	R0077	RD355680	Carbon Resistor (chip)	680.0 63M J				01
	R0078	RD355680	Carbon Resistor (chip)	680.0 63M J				01
	R0079	RD357100	Carbon Resistor (chip)	10.0K 63M J				01
	R0080	RD356470	Carbon Resistor (chip)	4.7K 63M J				01
	R0081	RD356100	Carbon Resistor (chip)	1.0K 63M J				01
	-0083	RD356100	Carbon Resistor (chip)	1.0K 63M J				01
	R0084	RD355330	Carbon Resistor (chip)	330.0 63M J				01
	R0085	RD355330	Carbon Resistor (chip)	330.0 63M J				01
	R0086	RD357100	Carbon Resistor (chip)	10.0K 63M J				01
	R0087	RD356100	Carbon Resistor (chip)	1.0K 63M J				01
	R0088	RD357100	Carbon Resistor (chip)	10.0K 63M J				01
	R0089	RD357100	Carbon Resistor (chip)	10.0K 63M J				01
	R0090	RD356220	Carbon Resistor (chip)	2.2K 63M J				01
	R0091	RD357120	Carbon Resistor (chip)	12.0K 63M J				01
	R0092	RD357100	Carbon Resistor (chip)	10.0K 63M J				01
	-0097	RD357100	Carbon Resistor (chip)	10.0K 63M J				01
	R0098	RD350000	Carbon Resistor (chip)	0 63M J				01
	-0100	RD350000	Carbon Resistor (chip)	0 63M J				01
	R0101	US064100	Ceramic Capacitor-B (chip)	0.0100 50V K				01
	-0104	US064100	Ceramic Capacitor-B (chip)	0.0100 50V K				01
	R0105	RD356220	Carbon Resistor (chip)	2.2K 63M J				01
	R0106	RD355150	Carbon Resistor (chip)	150.0 63M J				01
	R0107	RD356100	Carbon Resistor (chip)	1.0K 63M J				01
	R0108	RD356100	Carbon Resistor (chip)	1.0K 63M J				01
	R0111	RD350000	Carbon Resistor (chip)	0 63M J				01
*	R0112	V9791600	Carbon Resistor	1.8K 1/2 J				
	RY002	V8245600	Relay	DC ATX203		}		04
	RY002	V8616500	Relay	DC G6S-2				04
	TR001	VV556400	Transistor	2SC2412K Q,R,S				01
	-003	VV556400	Transistor	2SC2412K Q,R,S				01
	TR004	VJ927200	Transistor	2SA1162 O,Y				01
	TR005	VD303700	Transistor	2SC3326 A,B TE85R				01
	-008	VD303700	Transistor	2SC3326 A,B TE85R				01
	TR009	VV556400	Transistor	2SC2412K Q,R,S				01
	TR010	VD303700	Transistor	2SC3326 A,B TE85R				01
	TR011	VD303700	Transistor	2SC3326 A,B TE85R				01
	TR012	VV556400	Transistor	2SC2412K Q,R,S				01
	TR013	VV556400	Transistor	2SC2412K Q,R,S				01
	TR014	VJ927200	Transistor	2SA1162 O,Y				01
	TR015	VD303700	Transistor	2SC3326 A,B TE85R				01
	TR016	VD303700	Transistor	2SC3326 A,B TE85R				01
*	VR001	V8966100	Rotary Variable Resistor	A 10K RK09K12A0A2D		MIC/LINE IN (TRIM)		
	VR002	VV049200	Rotary Variable Resistor	B 10K RK09K12A0		AUX IN/LOOP RETURN (TRIM)		03
*		V8819300	Circuit Board	DJACK		(V881320)(X2510C0)		
		--	Jumper Wire	0.55		(VA07890)		
	MFDL	--	DML JACK Angle			(V927130)		
	MFDR	--	DMR JACK Angle			(V927140)		
	SC01	EP600140	Bind Head Tapping Screw-B	3.0X10 MFZN2BL				01
	C0001	FG644100	Electrolytic Cap.	0.0100 50V Z				01
	-0005	FG644100	Electrolytic Cap.	0.0100 50V Z				01
	C0010	FG644100	Electrolytic Cap.	0.0100 50V Z				01
	C0011	FG644100	Electrolytic Cap.	0.0100 50V Z				01
	C0012	VB835000	Coil	FL5R200QNT				
	C0015	FG613100	Ceramic Capacitor-B	1000P 50V K				01
	CN001	V3892800	Connector , FFC	52806 21P TE				01
	CN002	VB389800	Connector Base Post	PH- 2P TE				01
	CN003	V3671200	Jack	USB 4P TE		USB		03
	CN004	VB390000	Connector Base Post	PH- 4P TE				01
	CN005	LB918020	Base Post Connector	XH 2P TE				01
	D0001	VB941200	Diode	1SS133,1SS176				01
	D0002	VB941200	Diode	1SS133,1SS176				01

*: New Parts

RANK: Japan only

	REF NO.	PART NO.	DESCRIPTION			REMARKS	QTY	RANK
	G0002	--	GND7 Wire			(WA12610)		
	G0010	--	Vinyl Wire			(WA47250)		
	IC001	VD473200	Photo Coupler	6N137				05
	IC002	VD473200	Photo Coupler	6N137				05
	J0005	--	Jumper Wire	0.55		(VA07890)		
	J0006	--	Jumper Wire	0.55		(VA07890)		
	JK001	VS115400	Phone Jack	LGR4609-7000 BLACK		ASSIGNABLE FOOT PEDAL (1)		01
	JK002	VS115400	Phone Jack	LGR4609-7000 BLACK		ASSIGNABLE FOOT PEDAL (2)		01
	JK003	VS115400	Phone Jack	LGR4609-7000 BLACK		ASSIGNABLE FOOT PEDAL (3)		01
	JK004	VJ885500	DIN Connector	3P YKF51-5054		MIDI B (IN,OUT)		04
	JK005	VJ885500	DIN Connector	3P YKF51-5054		MIDI A (IN,OUT)		04
	JK006	VI311100	Pin Jack	YKC21-3017		VIDEO OUT (NTSC/PAL)		01
	L0001	VB835000	Coil	FL5R200QNT				01
	-0016	VB835000	Coil	FL5R200QNT				01
	L0018	GE300670	Ferrite Bead	BL02RN2-R62T4				02
	L0020	GE300670	Ferrite Bead	BL02RN2-R62T4				02
	L0021	GE300670	Ferrite Bead	BL02RN2-R62T4				02
	L0022	VB835000	Coil	FL5R200QNT				01
	-0025	VB835000	Coil	FL5R200QNT				01
	R0001	HF755100	Carbon Resistor	100.0 1/4 J				01
	-0004	HF755100	Carbon Resistor	100.0 1/4 J				01
	R0005	HF756100	Carbon Resistor	1.0K 1/4 J				01
	R0006	HF755100	Carbon Resistor	100.0 1/4 J				01
	R0007	HF756100	Carbon Resistor	1.0K 1/4 J				01
	R0008	HF756100	Carbon Resistor	1.0K 1/4 J				01
	R0009	HF755100	Carbon Resistor	100.0 1/4 J				01
	R0010	HF757100	Carbon Resistor	10.0K 1/4 J				01
	-0012	HF757100	Carbon Resistor	10.0K 1/4 J				01
	R0013	HF755220	Carbon Resistor	220.0 1/4 J				01
	-0018	HF755220	Carbon Resistor	220.0 1/4 J				01
	R0019	HF756150	Carbon Resistor	1.5K 1/4 J				01
	R0020	HF756150	Carbon Resistor	1.5K 1/4 J				01
	R0021	HF757220	Carbon Resistor	22.0K 1/4 J				01
	-0024	HF757220	Carbon Resistor	22.0K 1/4 J				01
	R0025	HF756100	Carbon Resistor	1.0K 1/4 J				01
	-0027	HF756100	Carbon Resistor	1.0K 1/4 J				01
	TR001	IC174020	Transistor	2SC1740S R,S				01
	-004	IC174020	Transistor	2SC1740S R,S				01
*		V8923800	Circuit Board	DM		(X2584D0)		
*		WA626700	Pin Protector			CN5		
	C0001	US064100	Ceramic Capacitor-B (chip)	0.0100 50V K				01
	-0003	US064100	Ceramic Capacitor-B (chip)	0.0100 50V K				01
	C0004	US062100	Ceramic Capacitor-SL(chip)	100P 50V J				01
	-0006	US062100	Ceramic Capacitor-SL(chip)	100P 50V J				01
	C0008	US062100	Ceramic Capacitor-SL(chip)	100P 50V J				01
	C0009	UF037100	Electrolytic Cap. (chip)	10 16V				01
	C0010	US062100	Ceramic Capacitor-SL(chip)	100P 50V J				01
	C0011	US064100	Ceramic Capacitor-B (chip)	0.0100 50V K				01
	C0012	US062100	Ceramic Capacitor-SL(chip)	100P 50V J				01
	C0013	US061220	Ceramic Capacitor-CH(chip)	22P 50V J				01
	C0014	US062100	Ceramic Capacitor-SL(chip)	100P 50V J				01
	C0015	US061220	Ceramic Capacitor-CH(chip)	22P 50V J				01
	C0016	US062100	Ceramic Capacitor-SL(chip)	100P 50V J				01
	C0017	US064100	Ceramic Capacitor-B (chip)	0.0100 50V K				01
	C0018	US062100	Ceramic Capacitor-SL(chip)	100P 50V J				01
	C0019	US062100	Ceramic Capacitor-SL(chip)	100P 50V J				01
	C0020	US064100	Ceramic Capacitor-B (chip)	0.0100 50V K				01
	C0024	US064100	Ceramic Capacitor-B (chip)	0.0100 50V K				01
	-0027	US064100	Ceramic Capacitor-B (chip)	0.0100 50V K				01
	C0028	UF037100	Electrolytic Cap. (chip)	10 16V				01
	C0029	US064100	Ceramic Capacitor-B (chip)	0.0100 50V K				01
	-0034	US064100	Ceramic Capacitor-B (chip)	0.0100 50V K				01
	C0035	UF018100	Electrolytic Cap. (chip)	100 6.3V				01
	C0036	UF038100	Electrolytic Cap. (chip)	100 16V				01
	-0038	UF038100	Electrolytic Cap. (chip)	100 16V				01
	C0039	US061220	Ceramic Capacitor-CH(chip)	22P 50V J				01
	C0040	US064100	Ceramic Capacitor-B (chip)	0.0100 50V K				01
	C0041	US061220	Ceramic Capacitor-CH(chip)	22P 50V J				01
	C0042	UF037100	Electrolytic Cap. (chip)	10 16V				01

*: New Parts

RANK: Japan only

	REF NO.	PART NO.	DESCRIPTION			REMARKS	QTY	RANK
	C0043	US135100	Ceramic Capacitor-F (chip)	0.1000 16V Z				01
	C0044	US064100	Ceramic Capacitor-B (chip)	0.0100 50V K				01
	C0045	UF037100	Electrolytic Cap. (chip)	10 16V				01
	C0046	US135100	Ceramic Capacitor-F (chip)	0.1000 16V Z				01
*	C0047	V9452200	Electrolytic OS Cap.(chip)	150.00 4.0V				
	C0048	US062470	Ceramic Capacitor-SL(chip)	470P 50V J				01
	C0049	US064100	Ceramic Capacitor-B (chip)	0.0100 50V K				01
	C0050	US062470	Ceramic Capacitor-SL(chip)	470P 50V J				01
	C0051	US064100	Ceramic Capacitor-B (chip)	0.0100 50V K				01
	C0052	US062470	Ceramic Capacitor-SL(chip)	470P 50V J				01
	C0053	US064100	Ceramic Capacitor-B (chip)	0.0100 50V K				01
	C0054	US062470	Ceramic Capacitor-SL(chip)	470P 50V J				01
	C0055	US064100	Ceramic Capacitor-B (chip)	0.0100 50V K				01
	C0056	UF037100	Electrolytic Cap. (chip)	10 16V				01
	C0057	UF037100	Electrolytic Cap. (chip)	10 16V				01
	C0058	US062470	Ceramic Capacitor-SL(chip)	470P 50V J				01
	C0059	US064100	Ceramic Capacitor-B (chip)	0.0100 50V K				01
	C0060	US064100	Ceramic Capacitor-B (chip)	0.0100 50V K				01
	C0061	US062470	Ceramic Capacitor-SL(chip)	470P 50V J				01
	C0062	US064100	Ceramic Capacitor-B (chip)	0.0100 50V K				01
	C0063	US135100	Ceramic Capacitor-F (chip)	0.1000 16V Z				01
	-0065	US135100	Ceramic Capacitor-F (chip)	0.1000 16V Z				01
	C0066	US062470	Ceramic Capacitor-SL(chip)	470P 50V J				01
	C0067	US064100	Ceramic Capacitor-B (chip)	0.0100 50V K				01
	C0068	US062470	Ceramic Capacitor-SL(chip)	470P 50V J				01
	C0069	US062470	Ceramic Capacitor-SL(chip)	470P 50V J				01
	C0070	US064100	Ceramic Capacitor-B (chip)	0.0100 50V K				01
	C0071	US064100	Ceramic Capacitor-B (chip)	0.0100 50V K				01
	C0072	US062470	Ceramic Capacitor-SL(chip)	470P 50V J				01
	C0073	US064100	Ceramic Capacitor-B (chip)	0.0100 50V K				01
	C0074	US062470	Ceramic Capacitor-SL(chip)	470P 50V J				01
	C0075	US064100	Ceramic Capacitor-B (chip)	0.0100 50V K				01
	C0076	US064100	Ceramic Capacitor-B (chip)	0.0100 50V K				01
	C0077	US062470	Ceramic Capacitor-SL(chip)	470P 50V J				01
	C0078	US064100	Ceramic Capacitor-B (chip)	0.0100 50V K				01
	C0079	US064100	Ceramic Capacitor-B (chip)	0.0100 50V K				01
	C0080	UF037100	Electrolytic Cap. (chip)	10 16V				01
	C0081	US062470	Ceramic Capacitor-SL(chip)	470P 50V J				01
	C0082	US062470	Ceramic Capacitor-SL(chip)	470P 50V J				01
	C0083	US064100	Ceramic Capacitor-B (chip)	0.0100 50V K				01
	C0084	US062470	Ceramic Capacitor-SL(chip)	470P 50V J				01
	C0085	US062470	Ceramic Capacitor-SL(chip)	470P 50V J				01
	C0086	US064100	Ceramic Capacitor-B (chip)	0.0100 50V K				01
	C0087	UF037100	Electrolytic Cap. (chip)	10 16V				01
	C0088	US064100	Ceramic Capacitor-B (chip)	0.0100 50V K				01
	C0090	US064100	Ceramic Capacitor-B (chip)	0.0100 50V K				01
	-0093	US064100	Ceramic Capacitor-B (chip)	0.0100 50V K				01
	C0094	US061220	Ceramic Capacitor-CH(chip)	22P 50V J				01
	C0095	US061220	Ceramic Capacitor-CH(chip)	22P 50V J				01
	C0096	US135100	Ceramic Capacitor-F (chip)	0.1000 16V Z				01
	C0098	US063100	Ceramic Capacitor-B (chip)	1000P 50V K				01
	C0099	UF066470	Electrolytic Cap. (chip)	4.7 50V				01
	C0100	UF118220	Electrolytic Cap. (chip)	220 6.3V UUR0J2				01
*	C0100	V9816500	Electrolytic Cap. (chip)	220 10V ECEV1AA221				
	C0101	US064100	Ceramic Capacitor-B (chip)	0.0100 50V K				01
	C0102	US063100	Ceramic Capacitor-B (chip)	1000P 50V K				01
	C0103	US064100	Ceramic Capacitor-B (chip)	0.0100 50V K				01
	C0104	US063100	Ceramic Capacitor-B (chip)	1000P 50V K				01
	C0105	US064100	Ceramic Capacitor-B (chip)	0.0100 50V K				01
	C0106	US062470	Ceramic Capacitor-SL(chip)	470P 50V J				01
	C0107	US064100	Ceramic Capacitor-B (chip)	0.0100 50V K				01
	C0108	US062470	Ceramic Capacitor-SL(chip)	470P 50V J				01
	C0109	US062470	Ceramic Capacitor-SL(chip)	470P 50V J				01
	C0110	US064100	Ceramic Capacitor-B (chip)	0.0100 50V K				01
	C0111	UF037100	Electrolytic Cap. (chip)	10 16V				01
	C0112	US064100	Ceramic Capacitor-B (chip)	0.0100 50V K				01
	C0113	US062470	Ceramic Capacitor-SL(chip)	470P 50V J				01
	C0114	US064100	Ceramic Capacitor-B (chip)	0.0100 50V K				01
	C0115	US062470	Ceramic Capacitor-SL(chip)	470P 50V J				01
	C0116	US062470	Ceramic Capacitor-SL(chip)	470P 50V J				01

*: New Parts

RANK: Japan only

REF NO.	PART NO.	DESCRIPTION			REMARKS	QTY	RANK
C0117	US064100	Ceramic Capacitor-B (chip)	0.0100 50V K				01
C0118	UF037100	Electrolytic Cap. (chip)	10 16V				01
C0119	US064100	Ceramic Capacitor-B (chip)	0.0100 50V K				01
C0120	US062470	Ceramic Capacitor-SL(chip)	470P 50V J				01
C0121	US064100	Ceramic Capacitor-B (chip)	0.0100 50V K				01
C0122	US062470	Ceramic Capacitor-SL(chip)	470P 50V J				01
C0123	US064100	Ceramic Capacitor-B (chip)	0.0100 50V K				01
C0124	US062470	Ceramic Capacitor-SL(chip)	470P 50V J				01
C0125	US064100	Ceramic Capacitor-B (chip)	0.0100 50V K				01
C0126	US062470	Ceramic Capacitor-SL(chip)	470P 50V J				01
C0127	US135100	Ceramic Capacitor-F (chip)	0.1000 16V Z				01
C0129	US064100	Ceramic Capacitor-B (chip)	0.0100 50V K				01
C0131	US064100	Ceramic Capacitor-B (chip)	0.0100 50V K				01
-0133	US064100	Ceramic Capacitor-B (chip)	0.0100 50V K				01
C0134	US063100	Ceramic Capacitor-B (chip)	1000P 50V K				01
C0135	US064100	Ceramic Capacitor-B (chip)	0.0100 50V K				01
-0144	US064100	Ceramic Capacitor-B (chip)	0.0100 50V K				01
C0145	US061100	Ceramic Capacitor-CH(chip)	10P 50V D				01
C0146	US062470	Ceramic Capacitor-SL(chip)	470P 50V J				01
C0147	US061100	Ceramic Capacitor-CH(chip)	10P 50V D				01
C0148	US064100	Ceramic Capacitor-B (chip)	0.0100 50V K				01
C0149	US064100	Ceramic Capacitor-B (chip)	0.0100 50V K				01
C0150	UF118220	Electrolytic Cap. (chip)	220 6.3V UUR0J2		}		01
* C0150	V9816500	Electrolytic Cap. (chip)	220 10V ECEV1AA221		}		
C0151	US064100	Ceramic Capacitor-B (chip)	0.0100 50V K				01
-0153	US064100	Ceramic Capacitor-B (chip)	0.0100 50V K				01
C0155	US062470	Ceramic Capacitor-SL(chip)	470P 50V J				01
C0156	US064100	Ceramic Capacitor-B (chip)	0.0100 50V K				01
C0157	US062470	Ceramic Capacitor-SL(chip)	470P 50V J				01
C0158	US064100	Ceramic Capacitor-B (chip)	0.0100 50V K				01
C0159	US061220	Ceramic Capacitor-CH(chip)	22P 50V J				01
C0160	US061220	Ceramic Capacitor-CH(chip)	22P 50V J				01
C0163	UF037100	Electrolytic Cap. (chip)	10 16V				01
C0164	US135100	Ceramic Capacitor-F (chip)	0.1000 16V Z				01
C0165	US064100	Ceramic Capacitor-B (chip)	0.0100 50V K				01
C0166	US062470	Ceramic Capacitor-SL(chip)	470P 50V J				01
C0167	US064100	Ceramic Capacitor-B (chip)	0.0100 50V K				01
C0168	US062470	Ceramic Capacitor-SL(chip)	470P 50V J				01
C0169	US064100	Ceramic Capacitor-B (chip)	0.0100 50V K				01
C0170	US062470	Ceramic Capacitor-SL(chip)	470P 50V J				01
C0171	US064100	Ceramic Capacitor-B (chip)	0.0100 50V K				01
C0172	UF037100	Electrolytic Cap. (chip)	10 16V				01
C0173	US064100	Ceramic Capacitor-B (chip)	0.0100 50V K				01
C0174	US062470	Ceramic Capacitor-SL(chip)	470P 50V J				01
C0175	US064100	Ceramic Capacitor-B (chip)	0.0100 50V K				01
C0176	US062470	Ceramic Capacitor-SL(chip)	470P 50V J				01
C0177	US064100	Ceramic Capacitor-B (chip)	0.0100 50V K				01
C0178	US062470	Ceramic Capacitor-SL(chip)	470P 50V J				01
C0179	US064100	Ceramic Capacitor-B (chip)	0.0100 50V K				01
C0180	UF037100	Electrolytic Cap. (chip)	10 16V				01
C0181	US135100	Ceramic Capacitor-F (chip)	0.1000 16V Z				01
C0182	UF018100	Electrolytic Cap. (chip)	100 6.3V				01
C0183	US062470	Ceramic Capacitor-SL(chip)	470P 50V J				01
-0196	US062470	Ceramic Capacitor-SL(chip)	470P 50V J				01
C0197	UF017470	Electrolytic Cap. (chip)	47 6.3V				01
C0198	US064100	Ceramic Capacitor-B (chip)	0.0100 50V K				01
-0211	US064100	Ceramic Capacitor-B (chip)	0.0100 50V K				01
C0212	UF017470	Electrolytic Cap. (chip)	47 6.3V				01
C0213	US064100	Ceramic Capacitor-B (chip)	0.0100 50V K				01
C0214	US064100	Ceramic Capacitor-B (chip)	0.0100 50V K				01
C0215	UF066470	Electrolytic Cap. (chip)	4.7 50V				01
C0216	UF066470	Electrolytic Cap. (chip)	4.7 50V				01
C0217	UF037100	Electrolytic Cap. (chip)	10 16V				01
C0218	US135100	Ceramic Capacitor-F (chip)	0.1000 16V Z				01
-0220	US135100	Ceramic Capacitor-F (chip)	0.1000 16V Z				01
C0221	UF037100	Electrolytic Cap. (chip)	10 16V				01
C0222	US135100	Ceramic Capacitor-F (chip)	0.1000 16V Z				01
C0223	US062470	Ceramic Capacitor-SL(chip)	470P 50V J				01
C0224	US062470	Ceramic Capacitor-SL(chip)	470P 50V J				01
C0225	UF037100	Electrolytic Cap. (chip)	10 16V				01

*: New Parts

RANK: Japan only

REF NO.	PART NO.	DESCRIPTION			REMARKS	QTY	RANK
C0226	US135100	Ceramic Capacitor-F (chip)	0.1000 16V Z				01
C0227	US135100	Ceramic Capacitor-F (chip)	0.1000 16V Z				01
C0228	UF037100	Electrolytic Cap. (chip)	10 16V				01
C0229	US135100	Ceramic Capacitor-F (chip)	0.1000 16V Z				01
C0230	UF037100	Electrolytic Cap. (chip)	10 16V				01
C0231	US062470	Ceramic Capacitor-SL(chip)	470P 50V J				01
-0244	US062470	Ceramic Capacitor-SL(chip)	470P 50V J				01
C0245	US135100	Ceramic Capacitor-F (chip)	0.1000 16V Z				01
C0246	UF017470	Electrolytic Cap. (chip)	47 6.3V				01
C0247	US064100	Ceramic Capacitor-B (chip)	0.0100 50V K				01
-0261	US064100	Ceramic Capacitor-B (chip)	0.0100 50V K				01
C0262	UF037100	Electrolytic Cap. (chip)	10 16V				01
C0263	UF017470	Electrolytic Cap. (chip)	47 6.3V				01
C0264	US135100	Ceramic Capacitor-F (chip)	0.1000 16V Z				01
C0265	UF037100	Electrolytic Cap. (chip)	10 16V				01
-0267	UF037100	Electrolytic Cap. (chip)	10 16V				01
C0268	US135100	Ceramic Capacitor-F (chip)	0.1000 16V Z				01
-0270	US135100	Ceramic Capacitor-F (chip)	0.1000 16V Z				01
C0271	UF037100	Electrolytic Cap. (chip)	10 16V				01
C0272	UF037100	Electrolytic Cap. (chip)	10 16V				01
C0273	US135100	Ceramic Capacitor-F (chip)	0.1000 16V Z				01
C0274	UF066100	Electrolytic Cap. (chip)	1 50V				01
C0275	UF066100	Electrolytic Cap. (chip)	1 50V				01
C0276	US135100	Ceramic Capacitor-F (chip)	0.1000 16V Z				01
C0277	UF046470	Electrolytic Cap. (chip)	4.7 25V				01
C0278	US063220	Ceramic Capacitor-B (chip)	2200P 50V K				01
-0281	US063220	Ceramic Capacitor-B (chip)	2200P 50V K				01
C0282	UF046470	Electrolytic Cap. (chip)	4.7 25V				01
-0284	UF046470	Electrolytic Cap. (chip)	4.7 25V				01
C0285	US135100	Ceramic Capacitor-F (chip)	0.1000 16V Z				01
C0286	UF046470	Electrolytic Cap. (chip)	4.7 25V				01
C0287	UF037100	Electrolytic Cap. (chip)	10 16V				01
C0288	US062820	Ceramic Capacitor-B (chip)	820P 50V K				01
C0289	US062820	Ceramic Capacitor-B (chip)	820P 50V K				01
C0290	US063820	Ceramic Capacitor-B (chip)	8200P 50V K				01
C0291	US063820	Ceramic Capacitor-B (chip)	8200P 50V K				01
C0292	US135100	Ceramic Capacitor-F (chip)	0.1000 16V Z				01
C0293	US062180	Ceramic Capacitor-SL(chip)	180P 50V J				01
-0295	US062180	Ceramic Capacitor-SL(chip)	180P 50V J				01
C0296	US063180	Ceramic Capacitor-B (chip)	1800P 50V K				01
-0299	US063180	Ceramic Capacitor-B (chip)	1800P 50V K				01
C0300	US062180	Ceramic Capacitor-SL(chip)	180P 50V J				01
C0301	US135100	Ceramic Capacitor-F (chip)	0.1000 16V Z				01
C0302	US063330	Ceramic Capacitor-B (chip)	3300P 50V K				01
C0303	US063330	Ceramic Capacitor-B (chip)	3300P 50V K				01
C0304	US062180	Ceramic Capacitor-SL(chip)	180P 50V J				01
C0305	US062180	Ceramic Capacitor-SL(chip)	180P 50V J				01
C0306	US064100	Ceramic Capacitor-B (chip)	0.0100 50V K				01
C0307	US063120	Ceramic Capacitor-B (chip)	1200P 50V K				01
C0308	US063120	Ceramic Capacitor-B (chip)	1200P 50V K				01
C0309	US135100	Ceramic Capacitor-F (chip)	0.1000 16V Z				01
C0310	US135100	Ceramic Capacitor-F (chip)	0.1000 16V Z				01
C0311	UF046470	Electrolytic Cap. (chip)	4.7 25V				01
C0312	UF046470	Electrolytic Cap. (chip)	4.7 25V				01
C0313	US135100	Ceramic Capacitor-F (chip)	0.1000 16V Z				01
C0314	UF046470	Electrolytic Cap. (chip)	4.7 25V				01
C0315	US061470	Ceramic Capacitor-CH(chip)	47P 50V J				01
C0316	US061470	Ceramic Capacitor-CH(chip)	47P 50V J				01
C0317	UF046470	Electrolytic Cap. (chip)	4.7 25V				01
C0318	UF018100	Electrolytic Cap. (chip)	100 6.3V				01
C0319	UF138220	Electrolytic Cap. (chip)	220 16V UUR1C2				01
C0320	UF138220	Electrolytic Cap. (chip)	220 16V UUR1C2				01
C0321	UF046470	Electrolytic Cap. (chip)	4.7 25V				01
C0322	UF046470	Electrolytic Cap. (chip)	4.7 25V				01
C0323	US062100	Ceramic Capacitor-SL(chip)	100P 50V J				01
C0324	US062100	Ceramic Capacitor-SL(chip)	100P 50V J				01
C0325	US063390	Ceramic Capacitor-B (chip)	3900P 50V K				01
C0326	US063390	Ceramic Capacitor-B (chip)	3900P 50V K				01
C0327	US062470	Ceramic Capacitor-SL(chip)	470P 50V J				01
C0328	US062470	Ceramic Capacitor-SL(chip)	470P 50V J				01

*: New Parts

RANK: Japan only

REF NO.	PART NO.	DESCRIPTION			REMARKS	QTY	RANK
C0329	US063390	Ceramic Capacitor-B (chip)	3900P 50V K				01
C0330	US063390	Ceramic Capacitor-B (chip)	3900P 50V K				01
C0331	US135100	Ceramic Capacitor-F (chip)	0.1000 16V Z				01
C0332	UF066100	Electrolytic Cap. (chip)	1 50V				01
C0333	UF066100	Electrolytic Cap. (chip)	1 50V				01
C0334	US062100	Ceramic Capacitor-SL(chip)	100P 50V J				01
-0336	US062100	Ceramic Capacitor-SL(chip)	100P 50V J				01
C0337	UB245100	Monolithic Ceramic Cap.	F 0.100 25V Z				01
C0338	US064100	Ceramic Capacitor-B (chip)	0.0100 50V K				01
C0339	US064100	Ceramic Capacitor-B (chip)	0.0100 50V K				01
C0340	UF037470	Electrolytic Cap. (chip)	47 16V				01
C0341	UF037100	Electrolytic Cap. (chip)	10 16V				01
C0342	US064100	Ceramic Capacitor-B (chip)	0.0100 50V K				01
-0349	US064100	Ceramic Capacitor-B (chip)	0.0100 50V K				01
C0350	US063100	Ceramic Capacitor-B (chip)	1000P 50V K				01
C0351	US064100	Ceramic Capacitor-B (chip)	0.0100 50V K				01
C0352	US063100	Ceramic Capacitor-B (chip)	1000P 50V K				01
C0353	UF037100	Electrolytic Cap. (chip)	10 16V				01
C0354	UF037100	Electrolytic Cap. (chip)	10 16V				01
C0355	US064100	Ceramic Capacitor-B (chip)	0.0100 50V K				01
-0359	US064100	Ceramic Capacitor-B (chip)	0.0100 50V K				01
C0360	UF037100	Electrolytic Cap. (chip)	10 16V				01
C0361	US064100	Ceramic Capacitor-B (chip)	0.0100 50V K				01
C0362	US135100	Ceramic Capacitor-F (chip)	0.1000 16V Z				01
C0363	US064100	Ceramic Capacitor-B (chip)	0.0100 50V K				01
C0364	US135100	Ceramic Capacitor-F (chip)	0.1000 16V Z				01
C0365	US064100	Ceramic Capacitor-B (chip)	0.0100 50V K				01
* C0366	V9452200	Electrolytic OS Cap.(chip)	150.00 4.0V				
C0367	US064100	Ceramic Capacitor-B (chip)	0.0100 50V K				01
-0373	US064100	Ceramic Capacitor-B (chip)	0.0100 50V K				01
C0374	US062470	Ceramic Capacitor-SL(chip)	470P 50V J				01
C0375	US062470	Ceramic Capacitor-SL(chip)	470P 50V J				01
C0376	US064100	Ceramic Capacitor-B (chip)	0.0100 50V K				01
-0379	US064100	Ceramic Capacitor-B (chip)	0.0100 50V K				01
C0380	US061220	Ceramic Capacitor-CH(chip)	22P 50V J				01
C0381	US061220	Ceramic Capacitor-CH(chip)	22P 50V J				01
C0382	US064100	Ceramic Capacitor-B (chip)	0.0100 50V K				01
-0384	US064100	Ceramic Capacitor-B (chip)	0.0100 50V K				01
C0385	US063100	Ceramic Capacitor-B (chip)	1000P 50V K				01
C0386	US064100	Ceramic Capacitor-B (chip)	0.0100 50V K				01
C0387	US064100	Ceramic Capacitor-B (chip)	0.0100 50V K				01
C0388	US062470	Ceramic Capacitor-SL(chip)	470P 50V J				01
C0389	US064100	Ceramic Capacitor-B (chip)	0.0100 50V K				01
C0390	US062470	Ceramic Capacitor-SL(chip)	470P 50V J				01
C0391	US064100	Ceramic Capacitor-B (chip)	0.0100 50V K				01
C0392	US064100	Ceramic Capacitor-B (chip)	0.0100 50V K				01
C0393	US062470	Ceramic Capacitor-SL(chip)	470P 50V J				01
C0394	US064100	Ceramic Capacitor-B (chip)	0.0100 50V K				01
C0395	US062470	Ceramic Capacitor-SL(chip)	470P 50V J				01
C0396	US064100	Ceramic Capacitor-B (chip)	0.0100 50V K				01
-0399	US064100	Ceramic Capacitor-B (chip)	0.0100 50V K				01
C0400	US063100	Ceramic Capacitor-B (chip)	1000P 50V K				01
C0401	US064100	Ceramic Capacitor-B (chip)	0.0100 50V K				01
C0402	US062470	Ceramic Capacitor-SL(chip)	470P 50V J				01
C0403	US064100	Ceramic Capacitor-B (chip)	0.0100 50V K				01
C0404	US062470	Ceramic Capacitor-SL(chip)	470P 50V J				01
C0405	US064100	Ceramic Capacitor-B (chip)	0.0100 50V K				01
C0406	US062470	Ceramic Capacitor-SL(chip)	470P 50V J				01
C0407	US064100	Ceramic Capacitor-B (chip)	0.0100 50V K				01
C0408	US062470	Ceramic Capacitor-SL(chip)	470P 50V J				01
C0409	US061150	Ceramic Capacitor-CH(chip)	15P 50V J				01
C0410	US061150	Ceramic Capacitor-CH(chip)	15P 50V J				01
C0411	UF037100	Electrolytic Cap. (chip)	10 16V				01
C0412	US064100	Ceramic Capacitor-B (chip)	0.0100 50V K				01
-0415	US064100	Ceramic Capacitor-B (chip)	0.0100 50V K				01
C0416	UF037100	Electrolytic Cap. (chip)	10 16V				01
C0417	US064100	Ceramic Capacitor-B (chip)	0.0100 50V K				01
-0426	US064100	Ceramic Capacitor-B (chip)	0.0100 50V K				01
C0429	US064100	Ceramic Capacitor-B (chip)	0.0100 50V K				01
C0430	US064100	Ceramic Capacitor-B (chip)	0.0100 50V K				01

*: New Parts

RANK: Japan only

	REF NO.	PART NO.	DESCRIPTION			REMARKS	QTY	RANK
	C0431	UF118470	Electrolytic Cap. (chip)	470 6.3V UUR0J4				01
	C0435	US064100	Ceramic Capacitor-B (chip)	0.0100 50V K				01
	C0436	US061120	Ceramic Capacitor-CH(chip)	12P 50V J				01
	C0437	US061120	Ceramic Capacitor-CH(chip)	12P 50V J				01
	C0440	US064100	Ceramic Capacitor-B (chip)	0.0100 50V K				01
	C0444	US061150	Ceramic Capacitor-CH(chip)	15P 50V J				01
	C0445	US061150	Ceramic Capacitor-CH(chip)	15P 50V J				01
	C0453	US064100	Ceramic Capacitor-B (chip)	0.0100 50V K				01
	C0454	US064100	Ceramic Capacitor-B (chip)	0.0100 50V K				01
	C0455	US135100	Ceramic Capacitor-F (chip)	0.1000 16V Z				01
	C0456	UF037470	Electrolytic Cap. (chip)	47 16V				01
	C0457	US064100	Ceramic Capacitor-B (chip)	0.0100 50V K				01
	C0510	US064100	Ceramic Capacitor-B (chip)	0.0100 50V K				01
	-0516	US064100	Ceramic Capacitor-B (chip)	0.0100 50V K				01
	C0517	US063100	Ceramic Capacitor-B (chip)	1000P 50V K				01
	C0518	US064100	Ceramic Capacitor-B (chip)	0.0100 50V K				01
	C0519	US063100	Ceramic Capacitor-B (chip)	1000P 50V K				01
	C0520	US064100	Ceramic Capacitor-B (chip)	0.0100 50V K				01
	-0526	US064100	Ceramic Capacitor-B (chip)	0.0100 50V K				01
	C0527	US063100	Ceramic Capacitor-B (chip)	1000P 50V K				01
	C0528	US064100	Ceramic Capacitor-B (chip)	0.0100 50V K				01
	C0529	US063100	Ceramic Capacitor-B (chip)	1000P 50V K				01
	C0530	US064100	Ceramic Capacitor-B (chip)	0.0100 50V K				01
	C0531	US064100	Ceramic Capacitor-B (chip)	0.0100 50V K				01
*	C0600	V9451300	Electrolytic OS Cap.(chip)	68.00 4.0V				
*	C0601	V9451300	Electrolytic OS Cap.(chip)	68.00 4.0V				
	C0603	US064100	Ceramic Capacitor-B (chip)	0.0100 50V K				01
	C0700	UF038100	Electrolytic Cap. (chip)	100 16V				01
	CN001	LB918070	Base Post Connector	XH 7P TE				01
	CN002	V9335000	Connector	52808 21P TE				01
	CN003	VH343800	Connector Header	HIF3FC-34PA2.54DSA				03
	CN005	V4459100	Connector Header	88333 44P SE				05
	CN008	VT388800	Base Post Connector	PH- 7P TE				
*	CN009	V9028300	Connector	52808 24P TE				
	CN010	V8389000	Connector , P.C.B.	55091 60P TE				04
	CN011	V8389000	Connector , P.C.B.	55091 60P TE				04
	CN013	VT388300	Base Post Connector	PH- 2P TE				
	CN014	V4415100	Connector	52808 30P TE				02
	CN020	VT388500	Base Post Connector	PH- 4P TE				01
	CN021	VT388500	Base Post Connector	PH- 4P TE				01
	D0004	VS201100	Diode	D1F60				01
	D0005	VT332900	Diode	1SS355 TE-17				01
	D0006	VS201100	Diode	D1F60				01
	-0008	VS201100	Diode	D1F60				01
	D0009	VT332900	Diode	1SS355 TE-17				01
	-0014	VT332900	Diode	1SS355 TE-17				01
	D0015	VS201100	Diode	D1F60				01
	D0016	VT332900	Diode	1SS355 TE-17				01
	-0021	VT332900	Diode	1SS355 TE-17				01
	IC001	XI939A00	IC	HD63266F		FDD CONTROLLER		09
	IC002	X0158A00	IC	SN74AHCT1G08DCKR		AND		01
	IC006	X0158A00	IC	SN74AHCT1G08DCKR		AND		01
	IC007	X2156A00	IC	M66291GP		USB CONTROLLER		09
	IC008	X0609A00	IC	LMS8117AMP-ADJ		REGULATOR		03
	IC009	X2687A00	IC	HD6417709SHF200B		CPU		20
	IC010	X3510A00	IC	SN74LVC138ANSR		} DECODER		01
	IC010	XS963A00	IC	HD74LVC138FP		} DECODER		02
	IC014	XV890A00	IC	TC74VHC14FT		INVERTER		02
*	IC016	X2791C00	IC	PRG-L		FLASH ROM 64M (PRG L)		
*	IC017	X2792C00	IC	PRG-H		FLASH ROM 64M (PRG H)		
	IC018	XY945A00	IC	TC74VHC32FT		OR		01
	IC019	XZ414B00	IC	W986416DH-7		DRAM 64M		
	IC020	XZ414B00	IC	W986416DH-7		DRAM 64M		
*	IC024	X2793100	IC	STYLE		MASK ROM 64M (STYLE)		
	IC025	XT744A00	IC	TC74VHCT245AFT		BUFFER		07
	-029	XT744A00	IC	TC74VHCT245AFT		BUFFER		07
	IC030	XT812A00	IC	TC74VHC11F(EL)		AND		01
*	IC032	X0079A00	IC	TC58FVB321FT-10		FLASH ROM 32M		
	IC033	XM332A00	IC	TC74VHC04F		INVERTER		01
	IC034	XZ372A00	IC	TC74VHCT32AFT-EL		OR		01

*: New Parts

RANK: Japan only

	REF NO.	PART NO.	DESCRIPTION			REMARKS	QTY	RANK
	IC035	XW875A00	IC	TC74VHC74F-EL		D FLIP-FLOP		01
	IC036	XS720A00	IC	TC74HC245AF		TRANCEIVER		03
	IC037	XT475A00	IC	TC74VHC157F(EL)		MULTIPLEXER		02
	IC039	X0060A00	IC	T8F02TB-0102		SWP50		15
	IC040	X0060A00	IC	T8F02TB-0102		SWP50		15
	IC041	X0609A00	IC	LMS8117AMP-ADJ		REGULATOR		03
	IC042	X0176A00	IC	W986432DH-7		SDRAM		15
	IC043	X0176A00	IC	W986432DH-7		SDRAM		15
	IC044	XF291A00	IC	UPC4570G2		OP AMP		03
	IC045	XW029A00	IC	AK4393-VF-E2		D/A CONVERTER		07
	IC046	XU770A00	IC	PCM1800E/2K		A/D CONVERTER		07
	IC047	XF291A00	IC	UPC4570G2		OP AMP		03
	IC048	X2077A00	IC	PCM1730E-1/2K		D/A CONVERTER		07
	IC049	XF291A00	IC	UPC4570G2		OP AMP		03
	IC050	XF291A00	IC	UPC4570G2		OP AMP		03
	IC053	XF291A00	IC	UPC4570G2		OP AMP		03
	IC054	XZ642A00	IC	TAR5S33		REGULATOR +3.3V		
	IC056	XF291A00	IC	UPC4570G2		OP AMP		03
	IC057	XV492A00	IC	UPC2905T-E1		REGULATOR +5V		03
	IC058	XF291A00	IC	UPC4570G2		OP AMP		03
*	IC061	X2796100	IC	UPD23C128000ALGY-		MASK ROM (WAVE L1)		
*	IC062	X2799100	IC	UPD23C128000ALGY-		MASK ROM (WAVE H1)		
	IC063	X2081A00	IC	HD6417709SF133		CPU		12
	IC064	X0609A00	IC	LMS8117AMP-ADJ		REGULATOR		03
*	IC066	X2794100	IC	SUB		MASK ROM 64M		
*	IC068	X2795100	IC	LCD		MASK ROM 128M		
	IC069	XZ414B00	IC	W986416DH-7		DRAM 64M		
	IC070	XZ414B00	IC	W986416DH-7		DRAM 64M		
	IC071	XU135A00	IC	TC160G22AF-1252		MPU INTERFACE		06
	IC072	XZ690A00	IC	S1D13506F00A100		LCD CONTROLLER		11
	IC073	XW148A00	IC	HD74LVC245ATELL		TRANCEIVER		02
	-077	XW148A00	IC	HD74LVC245ATELL		TRANCEIVER		02
	IC078	XZ964A00	IC	K4E151612D-TC60000		DRAM 16M		08
	IC080	XV891A00	IC	TC74VHC08FT		AND		01
	IC081	XD598A00	IC	TC74HCU04AFEL		INVERTER		01
	IC082	XV891A00	IC	TC74VHC08FT		AND		01
*	IC085	X2797100	IC	WAVE L2		MASK ROM 128 (WAVE L2)		
*	IC086	X2800100	IC	WAVE H2		MASK ROM 128 (WAVE H2)		
*	IC089	X2798100	IC	WAVE L3		MASK ROM 128 (WAVE L3)		
*	IC090	X2801100	IC	WAVE H3		MASK ROM 128 (WAVE H3)		
	IC091	XP642A00	IC	HD74LS09FPEL		AND		01
	L0002	VY657200	Chip Inductance	600 BK1608HM601				01
	L0003	VY657200	Chip Inductance	600 BK1608HM601				01
	L0004	VU954000	Chip Solid Inductance	BLM21P300SPT				01
	L0008	VR579900	Chip Inductance	BK2125HS601-T				01
	-0011	VR579900	Chip Inductance	BK2125HS601-T				01
	L0012	VY657200	Chip Inductance	600 BK1608HM601				01
	-0019	VY657200	Chip Inductance	600 BK1608HM601				01
	L0036	VY657200	Chip Inductance	600 BK1608HM601				01
	-0048	VY657200	Chip Inductance	600 BK1608HM601				01
	L0050	VY657200	Chip Inductance	600 BK1608HM601				01
	-0053	VY657200	Chip Inductance	600 BK1608HM601				01
	L0060	V2747000	Chip Inductance	BLM18PG600SN1				
	L0061	VU954000	Chip Solid Inductance	BLM21P300SPT				01
	L0700	VU954000	Chip Solid Inductance	BLM21P300SPT				01
	-0703	VU954000	Chip Solid Inductance	BLM21P300SPT				01
	R0001	RD350000	Carbon Resistor (chip)	0 63M J				01
	-0007	RD350000	Carbon Resistor (chip)	0 63M J				01
	R0008	RD355100	Carbon Resistor (chip)	100.0 63M J				01
	R0009	RD350000	Carbon Resistor (chip)	0 63M J				01
	R0010	RD355100	Carbon Resistor (chip)	100.0 63M J				01
	R0011	RD356150	Carbon Resistor (chip)	1.5K 63M J				01
	R0012	RD354270	Carbon Resistor (chip)	27.0 63M J				01
	R0013	RD354270	Carbon Resistor (chip)	27.0 63M J				01
	R0014	RD355100	Carbon Resistor (chip)	100.0 63M J				01
	R0015	RD355100	Carbon Resistor (chip)	100.0 63M J				01
	R0016	RD356220	Carbon Resistor (chip)	2.2K 63M J				01
	R0017	RD356220	Carbon Resistor (chip)	2.2K 63M J				01
	R0019	RD355470	Carbon Resistor (chip)	470.0 63M J				01
	-0023	RD355470	Carbon Resistor (chip)	470.0 63M J				01

*: New Parts

RANK: Japan only

REF NO.	PART NO.	DESCRIPTION			REMARKS	QTY	RANK
R0024	**RD356220**	Carbon Resistor (chip)	2.2K 63M J				01
R0025	**RD355470**	Carbon Resistor (chip)	470.0 63M J				01
R0026	**RD354680**	Carbon Resistor (chip)	68.0 63M J				01
R0027	**RD355470**	Carbon Resistor (chip)	470.0 63M J				01
R0028	**RD355470**	Carbon Resistor (chip)	470.0 63M J				01
R0029	**RD357100**	Carbon Resistor (chip)	10.0K 63M J				01
R0030	**RD357100**	Carbon Resistor (chip)	10.0K 63M J				01
R0031	**RD354680**	Carbon Resistor (chip)	68.0 63M J				01
R0032	**RD354680**	Carbon Resistor (chip)	68.0 63M J				01
R0033	**RD357100**	Carbon Resistor (chip)	10.0K 63M J				01
R0034	**RD355470**	Carbon Resistor (chip)	470.0 63M J				01
-0036	**RD355470**	Carbon Resistor (chip)	470.0 63M J				01
R0037	**RD355680**	Carbon Resistor (chip)	680.0 63M J				01
R0038	**RD359100**	Carbon Resistor (chip)	1.0M 63M J				01
R0040	**RD357100**	Carbon Resistor (chip)	10.0K 63M J				01
R0041	**RD357100**	Carbon Resistor (chip)	10.0K 63M J				01
R0042	**RD356470**	Carbon Resistor (chip)	4.7K 63M J				01
R0043	**RD356100**	Carbon Resistor (chip)	1.0K 63M J				01
R0044	**RD356270**	Carbon Resistor (chip)	2.7K 63M J				01
R0045	**RD354680**	Carbon Resistor (chip)	68.0 63M J				01
R0046	**RD350000**	Carbon Resistor (chip)	0 63M J				01
R0047	**RD358470**	Carbon Resistor (chip)	470.0K 63M J				01
-0049	**RD358470**	Carbon Resistor (chip)	470.0K 63M J				01
R0050	**RD356100**	Carbon Resistor (chip)	1.0K 63M J				01
R0051	**RD356100**	Carbon Resistor (chip)	1.0K 63M J				01
R0052	**RD354680**	Carbon Resistor (chip)	68.0 63M J				01
-0058	**RD354680**	Carbon Resistor (chip)	68.0 63M J				01
R0059	**RD356100**	Carbon Resistor (chip)	1.0K 63M J				01
R0060	**RD357100**	Carbon Resistor (chip)	10.0K 63M J				01
-0067	**RD357100**	Carbon Resistor (chip)	10.0K 63M J				01
R0068	**RD354680**	Carbon Resistor (chip)	68.0 63M J				01
-0070	**RD354680**	Carbon Resistor (chip)	68.0 63M J				01
R0071	**RD357100**	Carbon Resistor (chip)	10.0K 63M J				01
R0072	**RD354680**	Carbon Resistor (chip)	68.0 63M J				01
R0073	**RD354680**	Carbon Resistor (chip)	68.0 63M J				01
R0074	**RD357100**	Carbon Resistor (chip)	10.0K 63M J				01
R0075	**RD354680**	Carbon Resistor (chip)	68.0 63M J				01
R0076	**RD354680**	Carbon Resistor (chip)	68.0 63M J				01
R0077	**RD357100**	Carbon Resistor (chip)	10.0K 63M J				01
R0078	**RD354680**	Carbon Resistor (chip)	68.0 63M J				01
R0079	**RD357100**	Carbon Resistor (chip)	10.0K 63M J				01
R0080	**RD354680**	Carbon Resistor (chip)	68.0 63M J				01
R0081	**RD357100**	Carbon Resistor (chip)	10.0K 63M J				01
R0082	**RD354680**	Carbon Resistor (chip)	68.0 63M J				01
R0083	**RD357100**	Carbon Resistor (chip)	10.0K 63M J				01
R0084	**RD354680**	Carbon Resistor (chip)	68.0 63M J				01
R0085	**RD354680**	Carbon Resistor (chip)	68.0 63M J				01
R0086	**RD357100**	Carbon Resistor (chip)	10.0K 63M J				01
R0087	**RD354680**	Carbon Resistor (chip)	68.0 63M J				01
R0088	**RD354680**	Carbon Resistor (chip)	68.0 63M J				01
R0089	**RD357100**	Carbon Resistor (chip)	10.0K 63M J				01
R0090	**RD357100**	Carbon Resistor (chip)	10.0K 63M J				01
R0091	**RD354560**	Carbon Resistor (chip)	56.0 63M J				01
R0092	**RD354680**	Carbon Resistor (chip)	68.0 63M J				01
R0093	**RD357100**	Carbon Resistor (chip)	10.0K 63M J				01
R0094	**RD354680**	Carbon Resistor (chip)	68.0 63M J				01
R0095	**RD357100**	Carbon Resistor (chip)	10.0K 63M J				01
-0098	**RD357100**	Carbon Resistor (chip)	10.0K 63M J				01
R0099	**RD354680**	Carbon Resistor (chip)	68.0 63M J				01
R0100	**RD357100**	Carbon Resistor (chip)	10.0K 63M J				01
R0101	**RD354680**	Carbon Resistor (chip)	68.0 63M J				01
R0102	**RD354680**	Carbon Resistor (chip)	68.0 63M J				01
R0103	**RD357100**	Carbon Resistor (chip)	10.0K 63M J				01
R0104	**RD354680**	Carbon Resistor (chip)	68.0 63M J				01
R0105	**RD357100**	Carbon Resistor (chip)	10.0K 63M J				01
R0106	**RD350000**	Carbon Resistor (chip)	0 63M J				01
R0107	**RD350000**	Carbon Resistor (chip)	0 63M J				01
R0108	**RD355100**	Carbon Resistor (chip)	100.0 63M J				01
R0109	**RD350000**	Carbon Resistor (chip)	0 63M J				01
R0111	**RD355330**	Carbon Resistor (chip)	330.0 63M J				01

*: New Parts

RANK: Japan only

REF NO.	PART NO.	DESCRIPTION			REMARKS	QTY	RANK
R0112	**RD357100**	Carbon Resistor (chip)	10.0K 63M J				01
R0113	**RD357100**	Carbon Resistor (chip)	10.0K 63M J				01
R0114	**RD356100**	Carbon Resistor (chip)	1.0K 63M J				01
R0115	**RD357100**	Carbon Resistor (chip)	10.0K 63M J				01
R0116	**RD350000**	Carbon Resistor (chip)	0 63M J				01
R0117	**RD350000**	Carbon Resistor (chip)	0 63M J				01
R0118	**RD358470**	Carbon Resistor (chip)	470.0K 63M J				01
R0119	**RD358470**	Carbon Resistor (chip)	470.0K 63M J				01
R0120	**RD354680**	Carbon Resistor (chip)	68.0 63M J				01
-0122	**RD354680**	Carbon Resistor (chip)	68.0 63M J				01
R0123	**RD356100**	Carbon Resistor (chip)	1.0K 63M J				01
R0124	**RD357100**	Carbon Resistor (chip)	10.0K 63M J				01
R0125	**RD358470**	Carbon Resistor (chip)	470.0K 63M J				01
R0126	**RD358470**	Carbon Resistor (chip)	470.0K 63M J				01
R0127	**RD357220**	Carbon Resistor (chip)	22.0K 63M J				01
R0128	**RD357100**	Carbon Resistor (chip)	10.0K 63M J				01
-0132	**RD357100**	Carbon Resistor (chip)	10.0K 63M J				01
R0133	**RD358120**	Carbon Resistor (chip)	120.0K 63M J				01
R0134	**RD355100**	Carbon Resistor (chip)	100.0 63M J				01
R0135	**RD355100**	Carbon Resistor (chip)	100.0 63M J				01
R0136	**RD356100**	Carbon Resistor (chip)	1.0K 63M J				01
R0137	**RD359100**	Carbon Resistor (chip)	1.0M 63M J				01
R0142	**RD350000**	Carbon Resistor (chip)	0 63M J				01
R0143	**RD350000**	Carbon Resistor (chip)	0 63M J				01
R0144	**RD357100**	Carbon Resistor (chip)	10.0K 63M J				01
R0145	**RD354680**	Carbon Resistor (chip)	68.0 63M J				01
R0146	**RD357100**	Carbon Resistor (chip)	10.0K 63M J				01
-0149	**RD357100**	Carbon Resistor (chip)	10.0K 63M J				01
R0150	**RD350000**	Carbon Resistor (chip)	0 63M J				01
R0151	**RD350000**	Carbon Resistor (chip)	0 63M J				01
R0153	**RD350000**	Carbon Resistor (chip)	0 63M J				01
R0154	**RD350000**	Carbon Resistor (chip)	0 63M J				01
R0155	**RD354680**	Carbon Resistor (chip)	68.0 63M J				01
R0156	**RD354680**	Carbon Resistor (chip)	68.0 63M J				01
R0157	**RD350000**	Carbon Resistor (chip)	0 63M J				01
-0159	**RD350000**	Carbon Resistor (chip)	0 63M J				01
R0160	**RD357100**	Carbon Resistor (chip)	10.0K 63M J				01
R0161	**RD354680**	Carbon Resistor (chip)	68.0 63M J				01
R0162	**RD350000**	Carbon Resistor (chip)	0 63M J				01
R0163	**RD350000**	Carbon Resistor (chip)	0 63M J				01
R0164	**RD354100**	Carbon Resistor (chip)	10.0 63M J				01
-0169	**RD354100**	Carbon Resistor (chip)	10.0 63M J				01
R0171	**RD350000**	Carbon Resistor (chip)	0 63M J				01
R0172	**RD350000**	Carbon Resistor (chip)	0 63M J				01
R0173	**RD354100**	Carbon Resistor (chip)	10.0 63M J				01
R0174	**RD357100**	Carbon Resistor (chip)	10.0K 63M J				01
R0175	**RD357100**	Carbon Resistor (chip)	10.0K 63M J				01
R0176	**RD358470**	Carbon Resistor (chip)	470.0K 63M J				01
R0177	**RD350000**	Carbon Resistor (chip)	0 63M J				01
R0178	**RD356560**	Carbon Resistor (chip)	5.6K 63M J				01
R0179	**RD356560**	Carbon Resistor (chip)	5.6K 63M J				01
R0180	**RD354100**	Carbon Resistor (chip)	10.0 63M J				01
-0184	**RD354100**	Carbon Resistor (chip)	10.0 63M J				01
R0187	**RD354100**	Carbon Resistor (chip)	10.0 63M J				01
R0198	**RD355220**	Carbon Resistor (chip)	220.0 63M J				01
R0199	**RD356100**	Carbon Resistor (chip)	1.0K 63M J				01
R0200	**RD357100**	Carbon Resistor (chip)	10.0K 63M J				01
R0201	**RD357100**	Carbon Resistor (chip)	10.0K 63M J				01
R0206	**RD359100**	Carbon Resistor (chip)	1.0M 63M J				01
R0207	**RD354680**	Carbon Resistor (chip)	68.0 63M J				01
R0208	**RD354470**	Carbon Resistor (chip)	47.0 63M J				01
R0209	**RD354470**	Carbon Resistor (chip)	47.0 63M J				01
R0210	**RD357100**	Carbon Resistor (chip)	10.0K 63M J				01
R0211	**RD350000**	Carbon Resistor (chip)	0 63M J				01
R0212	**RD354470**	Carbon Resistor (chip)	47.0 63M J				01
R0213	**RD354470**	Carbon Resistor (chip)	47.0 63M J				01
R0215	**RD354470**	Carbon Resistor (chip)	47.0 63M J				01
R0216	**RD350000**	Carbon Resistor (chip)	0 63M J				01
R0217	**RD354470**	Carbon Resistor (chip)	47.0 63M J				01
R0218	**RD354470**	Carbon Resistor (chip)	47.0 63M J				01

*: New Parts

RANK: Japan only

REF NO.	PART NO.	DESCRIPTION			REMARKS	QTY	RANK
R0219	**RD357100**	Carbon Resistor (chip)	10.0K 63M J				01
R0220	**RD354470**	Carbon Resistor (chip)	47.0 63M J				01
R0222	**RD354470**	Carbon Resistor (chip)	47.0 63M J				01
R0224	**RD356820**	Carbon Resistor (chip)	8.2K 63M J				01
R0225	**RD355220**	Carbon Resistor (chip)	220.0 63M J				01
R0226	**RD356120**	Carbon Resistor (chip)	1.2K 63M J				01
R0227	**RD350000**	Carbon Resistor (chip)	0 63M J				01
R0228	**RD350000**	Carbon Resistor (chip)	0 63M J				01
R0229	**RD354680**	Carbon Resistor (chip)	68.0 63M J				01
R0230	**RD356100**	Carbon Resistor (chip)	1.0K 63M J				01
R0231	**RD357150**	Carbon Resistor (chip)	15.0K 63M J				01
R0232	**RD350000**	Carbon Resistor (chip)	0 63M J				01
R0233	**RD356180**	Carbon Resistor (chip)	1.8K 63M J				01
-0236	**RD356180**	Carbon Resistor (chip)	1.8K 63M J				01
R0237	**RD355220**	Carbon Resistor (chip)	220.0 63M J				01
R0238	**RD355220**	Carbon Resistor (chip)	220.0 63M J				01
R0239	**RD356470**	Carbon Resistor (chip)	4.7K 63M J				01
-0242	**RD356470**	Carbon Resistor (chip)	4.7K 63M J				01
R0243	**RD356220**	Carbon Resistor (chip)	2.2K 63M J				01
-0246	**RD356220**	Carbon Resistor (chip)	2.2K 63M J				01
R0247	**RD357100**	Carbon Resistor (chip)	10.0K 63M J				01
-0249	**RD357100**	Carbon Resistor (chip)	10.0K 63M J				01
R0250	**RD356470**	Carbon Resistor (chip)	4.7K 63M J				01
R0251	**RD356470**	Carbon Resistor (chip)	4.7K 63M J				01
R0252	**RD356220**	Carbon Resistor (chip)	2.2K 63M J				01
R0253	**RD356220**	Carbon Resistor (chip)	2.2K 63M J				01
R0254	**RD357100**	Carbon Resistor (chip)	10.0K 63M J				01
R0255	**RD356470**	Carbon Resistor (chip)	4.7K 63M J				01
R0256	**RD356470**	Carbon Resistor (chip)	4.7K 63M J				01
R0257	**RD356220**	Carbon Resistor (chip)	2.2K 63M J				01
R0258	**RD355390**	Carbon Resistor (chip)	390.0 63M J				01
R0259	**RD355390**	Carbon Resistor (chip)	390.0 63M J				01
R0260	**RD356220**	Carbon Resistor (chip)	2.2K 63M J				01
R0261	**RD355390**	Carbon Resistor (chip)	390.0 63M J				01
R0262	**RD355390**	Carbon Resistor (chip)	390.0 63M J				01
R0263	**RD357100**	Carbon Resistor (chip)	10.0K 63M J				01
-0268	**RD357100**	Carbon Resistor (chip)	10.0K 63M J				01
R0269	**RD358100**	Carbon Resistor (chip)	100.0K 63M J				01
R0270	**RD358100**	Carbon Resistor (chip)	100.0K 63M J				01
R0271	**RD357100**	Carbon Resistor (chip)	10.0K 63M J				01
-0274	**RD357100**	Carbon Resistor (chip)	10.0K 63M J				01
R0275	**RD358100**	Carbon Resistor (chip)	100.0K 63M J				01
R0276	**RD358100**	Carbon Resistor (chip)	100.0K 63M J				01
R0277	**RD356100**	Carbon Resistor (chip)	1.0K 63M J				01
R0278	**RD356100**	Carbon Resistor (chip)	1.0K 63M J				01
R0279	**RD354470**	Carbon Resistor (chip)	47.0 63M J				01
R0280	**RD354470**	Carbon Resistor (chip)	47.0 63M J				01
R0281	**RD354270**	Carbon Resistor (chip)	27.0 63M J				01
-0284	**RD354270**	Carbon Resistor (chip)	27.0 63M J				01
R0285	**RD356100**	Carbon Resistor (chip)	1.0K 63M J				01
R0286	**RD356100**	Carbon Resistor (chip)	1.0K 63M J				01
R0287	**RD358100**	Carbon Resistor (chip)	100.0K 63M J				01
R0288	**RD358100**	Carbon Resistor (chip)	100.0K 63M J				01
R0289	**RD355100**	Carbon Resistor (chip)	100.0 63M J				01
R0290	**RD354470**	Carbon Resistor (chip)	47.0 63M J				01
-0292	**RD354470**	Carbon Resistor (chip)	47.0 63M J				01
R0293	**RD357100**	Carbon Resistor (chip)	10.0K 63M J				01
R0294	**RD357100**	Carbon Resistor (chip)	10.0K 63M J				01
R0295	**RD356100**	Carbon Resistor (chip)	1.0K 63M J				01
-0298	**RD356100**	Carbon Resistor (chip)	1.0K 63M J				01
R0299	**RD356470**	Carbon Resistor (chip)	4.7K 63M J				01
R0300	**RD356470**	Carbon Resistor (chip)	4.7K 63M J				01
R0301	**RD356100**	Carbon Resistor (chip)	1.0K 63M J				01
R0302	**RD357100**	Carbon Resistor (chip)	10.0K 63M J				01
R0303	**RD350000**	Carbon Resistor (chip)	0 63M J				01
-0307	**RD350000**	Carbon Resistor (chip)	0 63M J				01
R0308	**RD354680**	Carbon Resistor (chip)	68.0 63M J				01
-0311	**RD354680**	Carbon Resistor (chip)	68.0 63M J				01
R0312	**RD357100**	Carbon Resistor (chip)	10.0K 63M J				01
R0314	**RD350000**	Carbon Resistor (chip)	0 63M J				01

*: New Parts

RANK: Japan only

REF NO.	PART NO.	DESCRIPTION			REMARKS	QTY	RANK
-0321	**RD350000**	Carbon Resistor (chip)	0 63M J				01
R0322	**RD357100**	Carbon Resistor (chip)	10.0K 63M J				01
R0323	**RD357100**	Carbon Resistor (chip)	10.0K 63M J				01
R0324	**RD358470**	Carbon Resistor (chip)	470.0K 63M J				01
R0325	**RD358470**	Carbon Resistor (chip)	470.0K 63M J				01
R0327	**RD356470**	Carbon Resistor (chip)	4.7K 63M J				01
R0328	**RD356220**	Carbon Resistor (chip)	2.2K 63M J				01
R0329	**RD356270**	Carbon Resistor (chip)	2.7K 63M J				01
R0330	**RD350000**	Carbon Resistor (chip)	0 63M J				01
R0333	**RD354680**	Carbon Resistor (chip)	68.0 63M J				01
R0334	**RD354680**	Carbon Resistor (chip)	68.0 63M J				01
R0335	**RD357100**	Carbon Resistor (chip)	10.0K 63M J				01
-0345	**RD357100**	Carbon Resistor (chip)	10.0K 63M J				01
R0346	**RD354680**	Carbon Resistor (chip)	68.0 63M J				01
R0347	**RD357100**	Carbon Resistor (chip)	10.0K 63M J				01
-0349	**RD357100**	Carbon Resistor (chip)	10.0K 63M J				01
R0350	**RD354680**	Carbon Resistor (chip)	68.0 63M J				01
R0351	**RD357100**	Carbon Resistor (chip)	10.0K 63M J				01
R0352	**RD350000**	Carbon Resistor (chip)	0 63M J				01
R0353	**RD350000**	Carbon Resistor (chip)	0 63M J				01
R0354	**RD357100**	Carbon Resistor (chip)	10.0K 63M J				01
-0357	**RD357100**	Carbon Resistor (chip)	10.0K 63M J				01
R0358	**RD350000**	Carbon Resistor (chip)	0 63M J				01
R0359	**RD350000**	Carbon Resistor (chip)	0 63M J				01
R0364	**RD350000**	Carbon Resistor (chip)	0 63M J				01
-0369	**RD350000**	Carbon Resistor (chip)	0 63M J				01
R0370	**RD359100**	Carbon Resistor (chip)	1.0M 63M J				01
R0371	**RD357100**	Carbon Resistor (chip)	10.0K 63M J				01
-0387	**RD357100**	Carbon Resistor (chip)	10.0K 63M J				01
R0388	**RD355150**	Carbon Resistor (chip)	150.0 63M J				01
R0389	**RD357100**	Carbon Resistor (chip)	10.0K 63M J				01
R0390	**RD354680**	Carbon Resistor (chip)	68.0 63M J				01
R0391	**RD356220**	Carbon Resistor (chip)	2.2K 63M J				01
R0392	**RD356150**	Carbon Resistor (chip)	1.5K 63M J				01
R0393	**RD356100**	Carbon Resistor (chip)	1.0K 63M J				01
R0400	**RD350000**	Carbon Resistor (chip)	0 63M J				01
-0403	**RD350000**	Carbon Resistor (chip)	0 63M J				01
R0405	**RD354470**	Carbon Resistor (chip)	47.0 63M J				01
-0407	**RD354470**	Carbon Resistor (chip)	47.0 63M J				01
R0410	**RD354680**	Carbon Resistor (chip)	68.0 63M J				01
R0411	**RD355330**	Carbon Resistor (chip)	330.0 63M J				01
R0412	**RD355270**	Carbon Resistor (chip)	270.0 63M J				01
R0413	**RD359100**	Carbon Resistor (chip)	1.0M 63M J				01
R0414	**RD359100**	Carbon Resistor (chip)	1.0M 63M J				01
R0418	**RD350000**	Carbon Resistor (chip)	0 63M J				01
-0434	**RD350000**	Carbon Resistor (chip)	0 63M J				01
R0500	**RD350000**	Carbon Resistor (chip)	0 63M J				01
R0501	**RD354680**	Carbon Resistor (chip)	68.0 63M J				01
R0508	**RD350000**	Carbon Resistor (chip)	0 63M J				01
R0509	**RD357100**	Carbon Resistor (chip)	10.0K 63M J				01
R0510	**RD357100**	Carbon Resistor (chip)	10.0K 63M J				01
R0513	**RD350000**	Carbon Resistor (chip)	0 63M J				01
-0520	**RD350000**	Carbon Resistor (chip)	0 63M J				01
R0523	**RD350000**	Carbon Resistor (chip)	0 63M J				01
-0530	**RD350000**	Carbon Resistor (chip)	0 63M J				01
R0531	**RD354100**	Carbon Resistor (chip)	10.0 63M J				01
R0532	**RD354100**	Carbon Resistor (chip)	10.0 63M J				01
R0534	**RD350000**	Carbon Resistor (chip)	0 63M J				01
R0536	**RD350000**	Carbon Resistor (chip)	0 63M J				01
R0538	**RD350000**	Carbon Resistor (chip)	0 63M J				01
R0540	**RD350000**	Carbon Resistor (chip)	0 63M J				01
R0600	**RD354100**	Carbon Resistor (chip)	10.0 63M J				01
R0601	**RD350000**	Carbon Resistor (chip)	0 63M J				01
R0610	**RD350000**	Carbon Resistor (chip)	0 63M J				01
-0625	**RD350000**	Carbon Resistor (chip)	0 63M J				01
R0700	**RD350000**	Carbon Resistor (chip)	0 63M J				01
R0702	**RD350000**	Carbon Resistor (chip)	0 63M J				01
R0704	**RD350000**	Carbon Resistor (chip)	0 63M J				01
RA001	**RE047100**	Resistor Array	10KX4				01
RA002	**RE044680**	Resistor Array	68X4				01

*: New Parts

RANK: Japan only

	REF NO.	PART NO.	DESCRIPTION			REMARKS	QTY	RANK
	-015	RE044680	Resistor Array	68X4				01
	RA016	RE047100	Resistor Array	10KX4				01
	RA017	RE047100	Resistor Array	10KX4				01
	RA018	RE046330	Resistor Array	3.3KX4				01
	-023	RE046330	Resistor Array	3.3KX4				01
	RA024	RE045100	Resistor Array	100X4				01
	-027	RE045100	Resistor Array	100X4				01
	RA028	RE047100	Resistor Array	10KX4				01
	RA029	RE047100	Resistor Array	10KX4				01
	RA030	RE048100	Resistor Array	100KX4				01
	RA031	RE044470	Resistor Array	47X4				01
	RA032	RE044470	Resistor Array	47X4				01
	RA033	RE048100	Resistor Array	100KX4				01
	RA034	RE044470	Resistor Array	47X4				01
	RA035	RE044470	Resistor Array	47X4				01
	RA036	RE048100	Resistor Array	100KX4				01
	RA037	RE044470	Resistor Array	47X4				01
	RA038	RE044470	Resistor Array	47X4				01
	RA039	RE048100	Resistor Array	100KX4				01
	RA040	RE044470	Resistor Array	47X4				01
	RA041	RE044470	Resistor Array	47X4				01
	RA042	RE048100	Resistor Array	100KX4				01
	RA043	RE044470	Resistor Array	47X4				01
	RA044	RE044470	Resistor Array	47X4				01
	RA045	RE047100	Resistor Array	10KX4				01
	RA046	RE044680	Resistor Array	68X4				01
	-078	RE044680	Resistor Array	68X4				01
	RA079	RE047100	Resistor Array	10KX4				01
	RA080	RE044680	Resistor Array	68X4				01
	RA081	RE047100	Resistor Array	10KX4				01
	RA082	RE044680	Resistor Array	68X4				01
	-090	RE044680	Resistor Array	68X4				01
	RA091	RE045100	Resistor Array	100X4				01
	-098	RE045100	Resistor Array	100X4				01
	TR001	VV925400	Transistor (chip)	2SC2SC2712 GR				01
	TR002	VV925400	Transistor (chip)	2SC2SC2712 GR				01
	TR003	VJ927200	Transistor	2SA1162 O,Y				01
	TR004	VV556400	Transistor	2SC2412K Q,R,S				01
	X0001	V3811500	Ceramic Resonator	16.00M CSTCV16M0				01
	X0002	V4093500	Quartz Crystal Unit	6M SMD-49				03
	X0003	VP864900	Quartz Crystal Unit	16M SMD-49				04
	X0004	VP864800	Quartz Crystal Unit	11.2896M SMD-49				04
	X0005	VR870700	Quartz Crystal Unit	10M SMD-49				04
	X0006	V2370300	Ceramic Resonator	16.00M CSACV16M0X				01
	X0008	V6074900	Quartz Crystal Unit	17.734475M SMD-49				03
	X0009	V6074800	Quartz Crystal Unit	14.31818MHZ SMD-49				03
	ZD001	V9312600	Zener Diode	HZU2.2BTRF 2.2V				01
	-004	V9312600	Zener Diode	HZU2.2BTRF 2.2V				01
*		V8946100	Circuit Board	EMKS-N		(V894600)(X2610C0)		
		--	Jumper Wire	0.55		(VA07890)		
	C0001	VC694800	Semiconductive Cera. Cap.	0.1000 25V Z				01
	C0002	UR828100	Electrolytic Cap.	100.00 10.0V				01
	C0003	FG644100	Electrolytic Cap.	0.0100 50V Z				01
	C0004	VC694800	Semiconductive Cera. Cap.	0.1000 25V Z				01
	C0005	VC694800	Semiconductive Cera. Cap.	0.1000 25V Z				01
	C0006	VP755200	Ceramic Capacitor Array	100P 50V K				02
	C0007	VP755200	Ceramic Capacitor Array	100P 50V K				02
	CN001	VB390300	Connector Base Post	PH- 7P TE				01
	CN002	VK025600	Wire Trap	52147 12P TE				01
	CN003	VK024900	Wire Trap	52147 5P TE				01
	CN005	VB389900	Connector Base Post	PH- 3P TE				01
	CN006	VK025100	Wire Trap	52147 7P TE				01
	D0001	VB941200	Diode	1SS133,1SS176				01
	D0002	VB941200	Diode	1SS133,1SS176				01
*	IC001	X0031200	IC	UPD780031AYGK-XXX		MSK CPU		
	R0001	HF756100	Carbon Resistor	1.0K 1/4 J				01
	R0002	HF754470	Carbon Resistor	47.0 1/4 J				01
	R0003	HF754470	Carbon Resistor	47.0 1/4 J				01
	R0004	HF757470	Carbon Resistor	47.0K 1/4 J				01

*: New Parts

RANK: Japan only

	REF NO.	PART NO.	DESCRIPTION			REMARKS	QTY	RANK
	RA001	V8090800	Resistor Array	RGLE12X103J				01
	X0001	V6091100	Ceramic Resonator	8.38M EFOMC8384T4				01
*		V9286500	Circuit Board	EN		(V881080)(X2500E0)		
*		V9286400	Circuit Board	PNR		(V881080)(X2500E0)		
	C0001	US064100	Ceramic Capacitor-B (chip)	0.0100 50V K				01
	C0002	UF118220	Electrolytic Cap. (chip)	220 6.3V UUR0J2				01
*	C0002	V9816500	Electrolytic Cap. (chip)	220 10V ECEV1AA221				
	C0003	US064100	Ceramic Capacitor-B (chip)	0.0100 50V K				01
	C0004	US061680	Ceramic Capacitor-SL(chip)	68P 50V J				01
	C0005	US064100	Ceramic Capacitor-B (chip)	0.0100 50V K				01
	C0006	US061680	Ceramic Capacitor-SL(chip)	68P 50V J				01
	C0007	UF118220	Electrolytic Cap. (chip)	220 6.3V UUR0J2				01
*	C0007	V9816500	Electrolytic Cap. (chip)	220 10V ECEV1AA221				
	C0008	US064100	Ceramic Capacitor-B (chip)	0.0100 50V K				01
	C0009	US064100	Ceramic Capacitor-B (chip)	0.0100 50V K				01
	C0010	US061680	Ceramic Capacitor-SL(chip)	68P 50V J				01
	C0011	US064100	Ceramic Capacitor-B (chip)	0.0100 50V K				01
	-0013	US064100	Ceramic Capacitor-B (chip)	0.0100 50V K				01
	C0015	US064100	Ceramic Capacitor-B (chip)	0.0100 50V K				01
	C0016	US062470	Ceramic Capacitor-SL(chip)	470P 50V J				01
	-0027	US062470	Ceramic Capacitor-SL(chip)	470P 50V J				01
	C0028	US064100	Ceramic Capacitor-B (chip)	0.0100 50V K				01
	C0029	UF118220	Electrolytic Cap. (chip)	220 6.3V UUR0J2				01
*	C0029	V9816500	Electrolytic Cap. (chip)	220 10V ECEV1AA221				
	C0030	US064100	Ceramic Capacitor-B (chip)	0.0100 50V K				01
	C0031	UF037100	Electrolytic Cap. (chip)	10 16V				01
	C0032	UF037100	Electrolytic Cap. (chip)	10 16V				01
	C0033	US064100	Ceramic Capacitor-B (chip)	0.0100 50V K				01
	C0034	US064100	Ceramic Capacitor-B (chip)	0.0100 50V K				01
	C0035	UF118220	Electrolytic Cap. (chip)	220 6.3V UUR0J2				01
*	C0035	V9816500	Electrolytic Cap. (chip)	220 10V ECEV1AA221				
	C0036	US064100	Ceramic Capacitor-B (chip)	0.0100 50V K				01
	C0037	UF037100	Electrolytic Cap. (chip)	10 16V				01
	C0038	US064100	Ceramic Capacitor-B (chip)	0.0100 50V K				01
	C0039	US064100	Ceramic Capacitor-B (chip)	0.0100 50V K				01
	C0040	UF118220	Electrolytic Cap. (chip)	220 6.3V UUR0J2				01
*	C0040	V9816500	Electrolytic Cap. (chip)	220 10V ECEV1AA221				
	C0043	US064100	Ceramic Capacitor-B (chip)	0.0100 50V K				01
	C0045	UF118220	Electrolytic Cap. (chip)	220 6.3V UUR0J2				01
*	C0045	V9816500	Electrolytic Cap. (chip)	220 10V ECEV1AA221				
	C0046	US064100	Ceramic Capacitor-B (chip)	0.0100 50V K				01
	-0052	US064100	Ceramic Capacitor-B (chip)	0.0100 50V K				01
	C0053	UF118220	Electrolytic Cap. (chip)	220 6.3V UUR0J2				01
*	C0053	V9816500	Electrolytic Cap. (chip)	220 10V ECEV1AA221				
	C0054	UF118220	Electrolytic Cap. (chip)	220 6.3V UUR0J2				01
*	C0054	V9816500	Electrolytic Cap. (chip)	220 10V ECEV1AA221				
	C0055	UF118220	Electrolytic Cap. (chip)	220 6.3V UUR0J2				01
*	C0055	V9816500	Electrolytic Cap. (chip)	220 10V ECEV1AA221				
	C0057	US064100	Ceramic Capacitor-B (chip)	0.0100 50V K				01
	-0059	US064100	Ceramic Capacitor-B (chip)	0.0100 50V K				01
	CN001	VB390800	Connector Base Post	PH-12P TE				01
	CN002	V5766700	Connector , FFC	52806 30P TE				01
	CN003	V3892800	Connector , FFC	52806 21P TE				01
	CN004	V5766700	Connector , FFC	52806 30P TE				01
	CN005	VB390000	Connector Base Post	PH- 4P TE				01
	-007	VB390000	Connector Base Post	PH- 4P TE				01
	CN008	LB918080	Base Post Connector	XH 8P TE				01
	CN008	VL845200	Base Post Connector	XH 8P TE				01
	D0001	VT332900	Diode	1SS355 TE-17				01
	-0057	VT332900	Diode	1SS355 TE-17				01
	EC001	VU481300	Encoder	REB161 PVB 15F		DATA ENTRY		03
	IC001	XZ916100	IC	UPD780031AYGK-N01		CPU		05
*	IC002	X2987A00	IC	M4A3-64/64-10VC		CPLD		
	L0001	RD250000	Carbon Resistor (chip)	0.0 0.0 J				01
*	LD001	V8966600	LED (chip)	TLGE1008A(T04) GR		ONE TOUCH SETTING (3)		
*	LD002	V8966500	LED (chip)	TLOE1008A(T04) OR		ONE TOUCH SETTING (3)		
	LD003	VT425300	LED	SLZ-290B-17-T1 GR		TRUMPET		01
	LD004	VT425300	LED	SLZ-290B-17-T1 GR		SYNTH		01
*	LD005	V8966600	LED (chip)	TLGE1008A(T04) GR		PART SELECT (RIGHT3)		

*: New Parts

RANK: Japan only

	REF NO.	PART NO.	DESCRIPTION			REMARKS	QTY	RANK
	LD006	VT425300	LED	SLZ-290B-17-T1 GR		SUSTAIN		01
*	LD007	V8966600	LED (chip)	TLGE1008A(T04) GR		ONE TOUCH SETTING (4)		
*	LD008	V8966500	LED (chip)	TLOE1008A(T04) OR		ONE TOUCH SETTING (4)		
	LD009	VT425300	LED	SLZ-290B-17-T1 GR		SAXOPHONE		01
	LD010	VT425300	LED	SLZ-290B-17-T1 GR		ORGAN FLUTES		01
	LD011	VG778600	LED	SLZ290B-03-T2GR		LEFT HOLD		01
	LD012	VT425300	LED	SLZ-290B-17-T1 GR		POLY/MONO		01
	LD013	VT425300	LED	SLZ-290B-17-T1 GR		PIANO		01
	LD014	VT425300	LED	SLZ-290B-17-T1 GR		FLUTE/CLARINET		01
	LD015	VT425300	LED	SLZ-290B-17-T1 GR		CUSTOM VOICE		01
*	LD016	V8966500	LED (chip)	TLOE1008A(T04) OR		PART ON/OFF (LEFT)		
	LD017	VT425300	LED	SLZ-290B-17-T1 GR		DSP		01
	LD018	VT425300	LED	SLZ-290B-17-T1 GR		E.PIANO		01
	LD019	VT425300	LED	SLZ-290B-17-T1 GR		GUITAR		01
	LD020	VT425300	LED	SLZ-290B-17-T1 GR		USER		01
*	LD021	V8966500	LED (chip)	TLOE1008A(T04) OR		PART ON/OFF (RIGHT1)		
	LD022	VT425300	LED	SLZ-290B-17-T1 GR		DSP VARIATION		01
	LD023	VT425300	LED	SLZ-290B-17-T1 GR		ORGAN		01
	LD024	VT425300	LED	SLZ-290B-17-T1 GR		BASS		01
*	LD025	V8966500	LED (chip)	TLOE1008A(T04) OR		PART ON/OFF (RIGHT2)		
*	LD026	V9276600	LED (chip)	E1S02-3B0A7-02 BL		PROGRAMABLE MUSIC FINDER		
	LD027	VT425300	LED	SLZ-290B-17-T1 GR		STRINGS		01
	LD028	VT425300	LED	SLZ-290B-17-T1 GR		PERC./DRUM KIT		01
*	LD029	V8966600	LED (chip)	TLGE1008A(T04) GR		PART SELECT (LEFT)		
*	LD030	V8966500	LED (chip)	TLOE1008A(T04) OR		PART ON/OFF (RIGHT3)		
*	LD031	V8966600	LED (chip)	TLGE1008A(T04) GR		ONE TOUCH SETTING (1)		
*	LD032	V8966500	LED (chip)	TLOE1008A(T04) OR		ONE TOUCH SETTING (1)		
	LD033	VT425300	LED	SLZ-290B-17-T1 GR		CHOIR		01
	LD034	VT425300	LED	SLZ-290B-17-T1 GR		ACCORDION		01
*	LD035	V8966600	LED (chip)	TLGE1008A(T04) GR		PART SELECT (RIGHT1)		
	LD036	VT425300	LED	SLZ-290B-17-T1 GR		HARMONY/ECHO		01
	LD037	VD180000	LED	SLZ-190B-03 RE		GUIDE		01
*	LD038	V8966600	LED (chip)	TLGE1008A(T04) GR		ONE TOUCH SETTING (2)		
*	LD039	V8966500	LED (chip)	TLOE1008A(T04) OR		ONE TOUCH SETTING (2)		
	LD040	VT425300	LED	SLZ-290B-17-T1 GR		BRASS		01
	LD041	VT425300	LED	SLZ-290B-17-T1 GR		PAD		01
*	LD042	V8966600	LED (chip)	TLGE1008A(T04) GR		PART SELECT (RIGHT2)		
	LD043	VT425300	LED	SLZ-290B-17-T1 GR		INITIAL TOUCH		01
	LD044	VT361700	LED	SLZ-274B-03-T1 GR		DISK IN USE		01
	R0001	RD356100	Carbon Resistor (chip)	1.0K 63M J				01
	R0002	RD354470	Carbon Resistor (chip)	47.0 63M J				01
	-0004	RD354470	Carbon Resistor (chip)	47.0 63M J				01
	R0005	RD350000	Carbon Resistor (chip)	0 63M J				01
	R0006	RD350000	Carbon Resistor (chip)	0 63M J				01
	R0007	RD357100	Carbon Resistor (chip)	10.0K 63M J				01
	-0011	RD357100	Carbon Resistor (chip)	10.0K 63M J				01
	R0014	RD357100	Carbon Resistor (chip)	10.0K 63M J				01
	-0020	RD357100	Carbon Resistor (chip)	10.0K 63M J				01
	R0023	RD354680	Carbon Resistor (chip)	68.0 63M J				01
	-0027	RD354680	Carbon Resistor (chip)	68.0 63M J				01
	R0028	RD355270	Carbon Resistor (chip)	270.0 63M J				01
	-0030	RD355270	Carbon Resistor (chip)	270.0 63M J				01
	R0033	RD357100	Carbon Resistor (chip)	10.0K 63M J				01
	-0038	RD357100	Carbon Resistor (chip)	10.0K 63M J				01
	R0043	RD350000	Carbon Resistor (chip)	0 63M J				01
	R0044	RD355270	Carbon Resistor (chip)	270.0 63M J				01
	-0048	RD355270	Carbon Resistor (chip)	270.0 63M J				01
	R0049	RD354680	Carbon Resistor (chip)	68.0 63M J				01
	-0051	RD354680	Carbon Resistor (chip)	68.0 63M J				01
	R0052	RD356100	Carbon Resistor (chip)	1.0K 63M J				01
	R0060	RD354220	Carbon Resistor (chip)	22.0 63M J				01
	-0064	RD354220	Carbon Resistor (chip)	22.0 63M J				01
	R0065	RD350000	Carbon Resistor (chip)	0 63M J				01
	-0083	RD350000	Carbon Resistor (chip)	0 63M J				01
	R0084	RD355180	Carbon Resistor (chip)	180.0 63M J				01
	R0085	RD350000	Carbon Resistor (chip)	0 63M J				01
	-0094	RD350000	Carbon Resistor (chip)	0 63M J				01
	R0095	RD354680	Carbon Resistor (chip)	68.0 63M J				01
	-0097	RD354680	Carbon Resistor (chip)	68.0 63M J				01
	R0098	RD357100	Carbon Resistor (chip)	10.0K 63M J				01

*: New Parts

RANK: Japan only

REF NO.	PART NO.	DESCRIPTION			REMARKS	QTY	RANK
R0099	**RD250000**	Carbon Resistor (chip)	0.0 0.0 J				01
R0101	**RD250000**	Carbon Resistor (chip)	0.0 0.0 J				01
SW001	**V8889300**	Push Switch	EVQ 11Y 07K		DEMO		01
SW001	**VV439800**	Tact Switch	SKQNAJ		DEMO		01
SW002	**V8889300**	Push Switch	EVQ 11Y 07K		ONE TOUCH SETTING (3)		01
SW002	**VV439800**	Tact Switch	SKQNAJ		ONE TOUCH SETTING (3)		01
SW003	**V8889300**	Push Switch	EVQ 11Y 07K		TRUMPET		01
SW003	**VV439800**	Tact Switch	SKQNAJ		TRUMPET		01
SW004	**V8889300**	Push Switch	EVQ 11Y 07K		SYNTH		01
SW004	**VV439800**	Tact Switch	SKQNAJ		SYNTH		01
SW005	**V8889300**	Push Switch	EVQ 11Y 07K		PART SELECT (RIGHT3)		01
SW005	**VV439800**	Tact Switch	SKQNAJ		PART SELECT (RIGHT3)		01
SW006	**V8889300**	Push Switch	EVQ 11Y 07K		SUSTAIN		01
SW006	**VV439800**	Tact Switch	SKQNAJ		SUTTAIN		01
SW007	**V8889300**	Push Switch	EVQ 11Y 07K		HELP		01
SW007	**VV439800**	Tact Switch	SKQNAJ		HELP		01
SW008	**V8889300**	Push Switch	EVQ 11Y 07K		ONE TOUCH SETTING (4)		01
SW008	**VV439800**	Tact Switch	SKQNAJ		ONE TOUCH SETTING (4)		01
SW009	**V8889300**	Push Switch	EVQ 11Y 07K		SAXOPHONE		01
SW009	**VV439800**	Tact Switch	SKQNAJ		SAXOPHONE		01
SW010	**V8889300**	Push Switch	EVQ 11Y 07K		ORGAN FLUTES		01
SW010	**VV439800**	Tact Switch	SKQNAJ		ORGAN FLUTES		01
SW011	**V8889300**	Push Switch	EVQ 11Y 07K		LEFT HOLD		01
SW011	**VV439800**	Tact Switch	SKQNAJ		LEFT HOLD		01
SW012	**V8889300**	Push Switch	EVQ 11Y 07K		POLY/MONO		01
SW012	**VV439800**	Tact Switch	SKQNAJ		POLY/MONO		01
SW013	**V8889300**	Push Switch	EVQ 11Y 07K		FUNCTION		01
SW013	**VV439800**	Tact Switch	SKQNAJ		FUNCTION		01
SW014	**V8889300**	Push Switch	EVQ 11Y 07K		PIANO		01
SW014	**VV439800**	Tact Switch	SKQNAJ		PIANO		01
SW015	**V8889300**	Push Switch	EVQ 11Y 07K		FLUTE/CLARINET		01
SW015	**VV439800**	Tact Switch	SKQNAJ		FLUTE/CLARINET		01
SW016	**V8889300**	Push Switch	EVQ 11Y 07K		CUSTOM VOICE		01
SW016	**VV439800**	Tact Switch	SKQNAJ		CUSTOM VOICE		01
SW017	**V8889300**	Push Switch	EVQ 11Y 07K		PART ON/OFF (LEFT)		01
SW017	**VV439800**	Tact Switch	SKQNAJ		PART ON/OFF (LEFT)		01
SW018	**V8889300**	Push Switch	EVQ 11Y 07K		DSP		01
SW018	**VV439800**	Tact Switch	SKQNAJ		DSP		01
SW019	**V8889300**	Push Switch	EVQ 11Y 07K		SOUND CREATOR		01
SW019	**VV439800**	Tact Switch	SKQNAJ		SOUND CREATOR		01
SW020	**V8889300**	Push Switch	EVQ 11Y 07K		E.PIANO		01
SW020	**VV439800**	Tact Switch	SKQNAJ		E.PIANO		01
SW021	**V8889300**	Push Switch	EVQ 11Y 07K		GUITAR		01
SW021	**VV439800**	Tact Switch	SKQNAJ		GUITAR		01
SW022	**V8889300**	Push Switch	EVQ 11Y 07K		USER		01
SW022	**VV439800**	Tact Switch	SKQNAJ		USER		01
SW023	**V8889300**	Push Switch	EVQ 11Y 07K		PART ON/OFF (RIGHT1)		01
SW023	**VV439800**	Tact Switch	SKQNAJ		PART ON/OFF (RIGHT1)		01
SW024	**V8889300**	Push Switch	EVQ 11Y 07K		DSP VARIATION		01
SW024	**VV439800**	Tact Switch	SKQNAJ		DSP VARIATION		01
SW025	**V8889300**	Push Switch	EVQ 11Y 07K		DIGITAL RECORDING		01
SW025	**VV439800**	Tact Switch	SKQNAJ		DIGITAL RECORDING		01
SW026	**V8889300**	Push Switch	EVQ 11Y 07K		ORGAN		01
SW026	**VV439800**	Tact Switch	SKQNAJ		ORGAN		01
SW027	**V8889300**	Push Switch	EVQ 11Y 07K		BASS		01
SW027	**VV439800**	Tact Switch	SKQNAJ		BASS		01
SW028	**V8889300**	Push Switch	EVQ 11Y 07K		ENTER		01
SW028	**VV439800**	Tact Switch	SKQNAJ		ENTER		01
SW029	**V8889300**	Push Switch	EVQ 11Y 07K		PART ON/OFF (RIGHT2)		01
SW029	**VV439800**	Tact Switch	SKQNAJ		PART ON/OFF (RIGHT2)		01
SW030	**V8889300**	Push Switch	EVQ 11Y 07K		UPPER OCTAVE (-)		01
SW030	**VV439800**	Tact Switch	SKQNAJ		UPPER OCTAVE (-)		01
SW031	**V8889300**	Push Switch	EVQ 11Y 07K		PROGRAMABLE MUSIC FINDER		01
SW031	**VV439800**	Tact Switch	SKQNAJ		PROGRAMABLE MUSIC FINDER		01
SW032	**V8889300**	Push Switch	EVQ 11Y 07K		STRINGS		01
SW032	**VV439800**	Tact Switch	SKQNAJ		STRINGS		01
SW033	**V8889300**	Push Switch	EVQ 11Y 07K		PERC./DRUM KIT		01
SW033	**VV439800**	Tact Switch	SKQNAJ		PERC./DRUM KIT		01
SW034	**V8889300**	Push Switch	EVQ 11Y 07K		PART SELECT (LEFT)		01
SW034	**VV439800**	Tact Switch	SKQNAJ		PART SELECT (LEFT)		01

*: New Parts

RANK: Japan only

	REF NO.	PART NO.	DESCRIPTION			REMARKS	QTY	RANK
	SW035	V8889300	Push Switch	EVQ 11Y 07K		PART ON/OFF (RIGHT3)		01
	SW035	VV439800	Tact Switch	SKQNAJ		PART ON/OFF (RIGHT3)		01
	SW036	V8889300	Push Switch	EVQ 11Y 07K		UPPER OCTAVE (+)		01
	SW036	VV439800	Tact Switch	SKQNAJ		UPPER OCTAVE (+)		01
	SW037	V8889300	Push Switch	EVQ 11Y 07K		ONE TOUCH SETTING (1)		01
	SW037	VV439800	Tact Switch	SKQNAJ		ONE TOUCH SETTING (1)		01
	SW038	V8889300	Push Switch	EVQ 11Y 07K		CHOIR		01
	SW038	VV439800	Tact Switch	SKQNAJ		CHOIR		01
	SW039	V8889300	Push Switch	EVQ 11Y 07K		ACCORDION		01
	SW039	VV439800	Tact Switch	SKQNAJ		ACCORDION		01
	SW040	V8889300	Push Switch	EVQ 11Y 07K		PART SELECT (RIGHT1)		01
	SW040	VV439800	Tact Switch	SKQNAJ		PART SELECT (RIGHT1)		01
	SW041	V8889300	Push Switch	EVQ 11Y 07K		HARMONY/ECHO		01
	SW041	VV439800	Tact Switch	SKQNAJ		HARMONY/ECHO		01
	SW042	V8889300	Push Switch	EVQ 11Y 07K		GUIDE		01
	SW042	VV439800	Tact Switch	SKQNAJ		GUIDE		01
	SW043	V8889300	Push Switch	EVQ 11Y 07K		ONE TOUCH SETTING (2)		01
	SW043	VV439800	Tact Switch	SKQNAJ		ONE TOUCH SETTING (2)		01
	SW044	V8889300	Push Switch	EVQ 11Y 07K		BRASS		01
	SW044	VV439800	Tact Switch	SKQNAJ		BRASS		01
	SW045	V8889300	Push Switch	EVQ 11Y 07K		PAD		01
	SW045	VV439800	Tact Switch	SKQNAJ		PAD		01
	SW046	V8889300	Push Switch	EVQ 11Y 07K		PART SELECT (RIGHT2)		01
	SW046	VV439800	Tact Switch	SKQNAJ		PART SELECT (RIGHT2)		01
	SW047	V8889300	Push Switch	EVQ 11Y 07K		INITIAL TOUCH		01
	SW047	VV439800	Tact Switch	SKQNAJ		INITIAL TOUCH		01
	TA001	V3117600	Transistor Array	M54564FP				04
	TA002	V3117600	Transistor Array	M54564FP				04
	TA003	VQ202400	Transistor Array	TD62785F SOURCE				04
	TA003	VT943400	Transistor Array	TD62785F(TP1)				04
	TR001	V5005800	Digital Transistor	FMG11A T148				01
*	TR002	WA013100	Digital Transistor	DTDG23YP				
*	-009	WA013100	Digital Transistor	DTDG23YP				
	X0001	V6150500	Ceramic Resonator	8.38M EFOS8384E5				01
*		V9285300	Circuit Board	INLET		(V895040)(X2621C0)		
*		V9286600	Circuit Board	MICVRSUB		(V895040)(X2621C0)		
*		V9285600	Circuit Board	PHONES		(V895040)(X2621C0)		
*		V9285400	Circuit Board	SPOUTL		(V895040)(X2621C0)		
*		V9285500	Circuit Board	SPOUTR		(V895040)(X2621C0)		
	MFSP	--	SP JACK Angle			(V927100)		
⚠	C0001	VY675000	Capacitor	0.010 250V J.U.C.S				01
	C0002	FG644100	Electrolytic Cap.	0.0100 50V Z				01
	C0003	FG644100	Electrolytic Cap.	0.0100 50V Z				01
	CN001	LB933020	Base Post Connector	VH- 2P SE				01
	CN002	VZ365900	Base Post Connector	VA- 2P TE				01
	CN003	VT807100	Base Post Connector	VH- 2P TE				01
	CN004	VB858500	Connector Base Post	PH- 6P SE				01
	CN005	LB933030	Base Post Connector	VH- 3P SE				01
	CN006	VE352600	Connector Base Post	PH-14P TE				01
	CN007	VH904200	Connector Base Post	PH-14P SE				01
⚠ *	F0001	VT942800	Fuse	TH 2.00A S				
⚠	FZ001	VP206500	Fuse Holder	EYF-52BC				01
⚠	JK001	VZ071000	AC Inlet	CCT2302-0382		AC INLET		02
*	JK002	V9116100	Phone Jack	YKB21-5012G BLACK		TO LEFT SPEAKER		
*	JK003	V9116100	Phone Jack	YKB21-5012G BLACK		TO RIGHT SPEAKER		
	JK004	LB101870	Phone Jack	YKB21-5006		PHONES		03
	L0001	--	Jumper Wire	0.55		(VA07890)		
	L0002	--	Jumper Wire	0.55		(VA07890)		
	L0003	GE300670	Ferrite Bead	BL02RN2-R62T4				02
	-0007	GE300670	Ferrite Bead	BL02RN2-R62T4				02
	L0008	--	Jumper Wire	0.55		(VA07890)		
	L0009	--	Jumper Wire	0.55		(VA07890)		
*	R0001	HF354680	Carbon Resistor	68.0 1/2 J				
*	R0001	V9638900	Carbon Resistor	68.0 1/2 J				
*	R0002	HF354680	Carbon Resistor	68.0 1/2 J				
*	R0002	V9638900	Carbon Resistor	68.0 1/2 J				
*		V9286100	Circuit Board	LCL		(V881120)(X2503D0)		
*		V9286000	Circuit Board	LCR		(V881120)(X2503D0)		

*: New Parts

RANK: Japan only

	REF NO.	PART NO.	DESCRIPTION			REMARKS	QTY	RANK
	C0002	US064100	Ceramic Capacitor-B (chip)	0.0100 50V K				01
	C0004	US064100	Ceramic Capacitor-B (chip)	0.0100 50V K				01
	C0005	US064100	Ceramic Capacitor-B (chip)	0.0100 50V K				01
*	C0006	V9220500	Mylar Capacitor (chip)	0.1500 250V K				
*	C0007	VV594400	Monolithic Ceramic Cap.	12P 3.15KV D				
	C0008	UF118220	Electrolytic Cap. (chip)	220 6.3V UUR0J2				01
*	C0008	V9816500	Electrolytic Cap. (chip)	220 10V ECEV1AA221				
	CN001	V6146400	Connector , FFC	52207 21P SE				02
*	CN002	V7294700	Connector	52746 20P SE				
*	CN003	V9006000	Connector , FFC	52207 9P SE				
	CN004	VT283700	Connector , FFC	52207 12P SE				03
*	CN005	V9006000	Connector , FFC	52207 9P SE				
	CN006	V7293500	Connector	BH 3P SE				02
	CN007	VB858100	Connector Base Post	PH- 2P SE				01
	D0001	VT332900	Diode	1SS355 TE-17				01
	-0014	VT332900	Diode	1SS355 TE-17				01
*	L0001	V9247200	Coil	CDH74 330 K SMD				
	R0001	RD356100	Carbon Resistor (chip)	1.0K 63M J				01
	R0002	RD356150	Carbon Resistor (chip)	1.5K 63M J				01
	R0003	RD356390	Carbon Resistor (chip)	3.9K 63M J				01
	R0004	RD156180	Carbon Resistor (chip)	1.8K 1/4 J				01
	R0005	RD156180	Carbon Resistor (chip)	1.8K 1/4 J				01
	R0007	RD355100	Carbon Resistor (chip)	100.0 63M J				01
	SW001	V7446600	Tact Switch	EVQQWS03W		A		01
	SW002	V7446600	Tact Switch	EVQQWS03W		B		01
	SW003	V7446600	Tact Switch	EVQQWS03W		C		01
	SW004	V7446600	Tact Switch	EVQQWS03W		D		01
	SW005	V7446600	Tact Switch	EVQQWS03W		E		01
	SW006	V7446600	Tact Switch	EVQQWS03W		DIRCT ACCESS		01
	SW007	V7446600	Tact Switch	EVQQWS03W		BACK		01
	SW008	V7446600	Tact Switch	EVQQWS03W		NEXT		01
	SW009	V7446600	Tact Switch	EVQQWS03W		F		01
	SW010	V7446600	Tact Switch	EVQQWS03W		G		01
	SW011	V7446600	Tact Switch	EVQQWS03W		H		01
	SW012	V7446600	Tact Switch	EVQQWS03W		I		01
	SW013	V7446600	Tact Switch	EVQQWS03W		J		01
	SW014	V7446600	Tact Switch	EVQQWS03W		EXIT		01
*	T0001	V8810700	Inverter Transformer	CEPH165				
*	TR001	V9065800	Transistor	2SC4672-T100PQ				
*	TR002	V9065800	Transistor	2SC4672-T100PQ				
*	VR001	V8966200	Rotary Variable Resistor	B 10K RK14J11A		LCD CONTRAST		
*		V9285900	Circuit Board	MICVR		(V881090)(X2501E0)		
*		V9285800	Circuit Board	PNL		(V881090)(X2501E0)		
*		V9642100	LED Spacer	LH-5-9.5				
	C0001	UF118220	Electrolytic Cap. (chip)	220 6.3V UUR0J2				01
*	C0001	V9816500	Electrolytic Cap. (chip)	220 10V ECEV1AA221				
	C0002	US064100	Ceramic Capacitor-B (chip)	0.0100 50V K				01
	C0003	US064100	Ceramic Capacitor-B (chip)	0.0100 50V K				01
	C0004	UF118220	Electrolytic Cap. (chip)	220 6.3V UUR0J2				01
*	C0004	V9816500	Electrolytic Cap. (chip)	220 10V ECEV1AA221				
	C0005	US064100	Ceramic Capacitor-B (chip)	0.0100 50V K				01
	-0007	US064100	Ceramic Capacitor-B (chip)	0.0100 50V K				01
	C0010	US061680	Ceramic Capacitor-SL(chip)	68P 50V J				01
	C0011	US064100	Ceramic Capacitor-B (chip)	0.0100 50V K				01
	C0012	US064100	Ceramic Capacitor-B (chip)	0.0100 50V K				01
	C0013	UF118220	Electrolytic Cap. (chip)	220 6.3V UUR0J2				01
*	C0013	V9816500	Electrolytic Cap. (chip)	220 10V ECEV1AA221				
	C0014	US064100	Ceramic Capacitor-B (chip)	0.0100 50V K				01
	-0017	US064100	Ceramic Capacitor-B (chip)	0.0100 50V K				01
	C0018	UF118220	Electrolytic Cap. (chip)	220 6.3V UUR0J2				01
*	C0018	V9816500	Electrolytic Cap. (chip)	220 10V ECEV1AA221				
	C0019	US064100	Ceramic Capacitor-B (chip)	0.0100 50V K				01
	-0021	US064100	Ceramic Capacitor-B (chip)	0.0100 50V K				01
	C0022	UF118220	Electrolytic Cap. (chip)	220 6.3V UUR0J2				01
*	C0022	V9816500	Electrolytic Cap. (chip)	220 10V ECEV1AA221				
	C0023	US062470	Ceramic Capacitor-SL(chip)	470P 50V J				01
	-0034	US062470	Ceramic Capacitor-SL(chip)	470P 50V J				01
	C0035	US064100	Ceramic Capacitor-B (chip)	0.0100 50V K				01
	C0036	UF118220	Electrolytic Cap. (chip)	220 6.3V UUR0J2				01

*: New Parts

RANK: Japan only

	REF NO.	PART NO.	DESCRIPTION			REMARKS	QTY	RANK
*	C0036	V9816500	Electrolytic Cap. (chip)	220 10V ECEV1AA221				
	C0037	US064100	Ceramic Capacitor-B (chip)	0.0100 50V K				01
	C0038	UF037100	Electrolytic Cap. (chip)	10 16V				01
	C0039	UF037100	Electrolytic Cap. (chip)	10 16V				01
	C0040	US064100	Ceramic Capacitor-B (chip)	0.0100 50V K				01
	C0041	US135100	Ceramic Capacitor-F (chip)	0.1000 16V Z				01
	C0042	US064100	Ceramic Capacitor-B (chip)	0.0100 50V K				01
	C0043	UF037100	Electrolytic Cap. (chip)	10 16V				01
	C0044	US064100	Ceramic Capacitor-B (chip)	0.0100 50V K				01
	C0045	US135100	Ceramic Capacitor-F (chip)	0.1000 16V Z				01
	C0047	US064100	Ceramic Capacitor-B (chip)	0.0100 50V K				01
	C0048	UF118220	Electrolytic Cap. (chip)	220 6.3V UUR0J2		}		01
*	C0048	V9816500	Electrolytic Cap. (chip)	220 10V ECEV1AA221		}		
	C0049	US135100	Ceramic Capacitor-F (chip)	0.1000 16V Z				01
	C0050	US135100	Ceramic Capacitor-F (chip)	0.1000 16V Z				01
	C0052	US064100	Ceramic Capacitor-B (chip)	0.0100 50V K				01
	-0054	US064100	Ceramic Capacitor-B (chip)	0.0100 50V K				01
	C0058	US064100	Ceramic Capacitor-B (chip)	0.0100 50V K				01
	C0059	UF118220	Electrolytic Cap. (chip)	220 6.3V UUR0J2		}		01
*	C0059	V9816500	Electrolytic Cap. (chip)	220 10V ECEV1AA221		}		
	C0061	US064100	Ceramic Capacitor-B (chip)	0.0100 50V K				01
	-0064	US064100	Ceramic Capacitor-B (chip)	0.0100 50V K				01
	CN001	VB390800	Connector Base Post	PH-12P TE				01
	CN002	VB390000	Connector Base Post	PH- 4P TE				01
	CN003	V4928200	Connector , FFC	52806 12P TE				01
	CN004	VH904200	Connector Base Post	PH-14P SE				01
	CN005	VB858100	Connector Base Post	PH- 2P SE				01
	CN006	LB918080	Base Post Connector	XH 8P TE		}		01
	CN006	VL845200	Base Post Connector	XH 8P TE		}		01
	CN007	LB932020	Base Post Connector	VH- 2P TE				01
	D0001	VT332900	Diode	1SS355 TE-17				01
	-0069	VT332900	Diode	1SS355 TE-17				01
	IC001	XZ916100	IC	UPD780031AYGK-N01		CPU		05
*	IC002	X2987A00	IC	M4A3-64/64-10VC		CPLD		08
	L0001	V5848100	Chip Inductance	56U ELJFC560JF				01
	-0004	V5848100	Chip Inductance	56U ELJFC560JF				01
	LD001	VT361700	LED	SLZ-274B-03-T1 GR		MIC/LINE IN (SIGNAL)		01
	LD002	VT659100	LED	SLZ-174B-03-T1 RE		MIC/LINE IN (OVER)		01
	LD003	VT425300	LED	SLZ-290B-17-T1 GR		VOCAL HARMONY		01
	LD004	VG197600	LED	GL3ED8		SP4		01
	LD005	VT425300	LED	SLZ-290B-17-T1 GR		I		01
	LD006	VT425300	LED	SLZ-290B-17-T1 GR		DANCE		01
	LD007	VT425300	LED	SLZ-290B-17-T1 GR		PRESET		01
*	LD008	V8966600	LED (chip)	TLGE1008A(T04) GR		INTRO (I)		
*	LD009	V8966500	LED (chip)	TLOE1008A(T04) OR		INTRO (I)		
*	LD010	V8966600	LED (chip)	TLGE1008A(T04) GR		ENDING/rit. (I)		
*	LD011	V8966500	LED (chip)	TLOE1008A(T04) OR		ENDING/rit. (I)		
	LD012	VT425300	LED	SLZ-290B-17-T1 GR		TALK		01
	LD013	VT425300	LED	SLZ-290B-17-T1 GR		LOOP		01
	LD014	VT425300	LED	SLZ-290B-17-T1 GR		II		01
	LD015	VT425300	LED	SLZ-290B-17-T1 GR		SWING&JAZZ		01
	LD016	VT425300	LED	SLZ-290B-17-T1 GR		USER/DISK		01
*	LD017	V8966600	LED (chip)	TLGE1008A(T04) GR		INTRO (II)		
*	LD018	V8966500	LED (chip)	TLOE1008A(T04) OR		INTRO (II)		
*	LD019	V8966600	LED (chip)	TLGE1008A(T04) GR		ENDING/rit. (II)		
*	LD020	V8966500	LED (chip)	TLOE1008A(T04) OR		ENDING/rit. (II)		
	LD021	VT425300	LED	SLZ-290B-17-T1 GR		EFFECT		01
	LD022	VT425300	LED	SLZ-290B-17-T1 GR		FADE IN/OUT		01
	LD023	VT425300	LED	SLZ-290B-17-T1 GR		III		01
	LD024	VT425300	LED	SLZ-290B-17-T1 GR		R&B		01
*	LD025	V8966500	LED (chip)	TLOE1008A(T04) OR		ACMP		
*	LD026	V8966600	LED (chip)	TLGE1008A(T04) GR		INTRO (III)		
*	LD027	V8966500	LED (chip)	TLOE1008A(T04) OR		INTRO (III)		
*	LD028	V8966600	LED (chip)	TLGE1008A(T04) GR		ENDING/rit. (III)		
*	LD029	V8966500	LED (chip)	TLOE1008A(T04) OR		ENDING/rit. (III)		
	LD030	VT425100	LED	SLZ-190B-17-T1 RE		REC		01
	LD031	VT425300	LED	SLZ-290B-17-T1 GR		IV		01
	LD032	VT425300	LED	SLZ-290B-17-T1 GR		COUNTRY		01
	LD033	VT425100	LED	SLZ-190B-17-T1 RE		OTS LINK		01
*	LD034	V8966600	LED (chip)	TLGE1008A(T04) GR		MULTI PAD CONTROL (1)		

*: New Parts

RANK: Japan only

	REF NO.	PART NO.	DESCRIPTION			REMARKS	QTY	RANK
*	LD035	**V8966500**	LED (chip)	TLOE1008A(T04) OR		MULTI PAD CONTROL (1)		
*	LD036	**V8966600**	LED (chip)	TLGE1008A(T04) GR		MAIN VARIATION (A)		
*	LD037	**V8966500**	LED (chip)	TLOE1008A(T04) OR		MAIN VARIATION (A)		
*	LD038	**V8966500**	LED (chip)	TLOE1008A(T04) OR		SYNC STOP		
	LD039	**VT425300**	LED	SLZ-290B-17-T1 GR		V		01
	LD040	**VT425300**	LED	SLZ-290B-17-T1 GR		LATIN		01
	LD041	**VT425100**	LED	SLZ-190B-17-T1 RE		AUTO FILL IN		01
*	LD042	**V8966600**	LED (chip)	TLGE1008A(T04) GR		MULTI PAD CONTROL (2)		
*	LD043	**V8966500**	LED (chip)	TLOE1008A(T04) OR		MULTI PAD CONTROL (2)		
*	LD044	**V8966600**	LED (chip)	TLGE1008A(T04) GR		MAIN VARIATION (B)		
*	LD045	**V8966500**	LED (chip)	TLOE1008A(T04) OR		MAIN VARIATION (B)		
*	LD046	**V8966500**	LED (chip)	TLOE1008A(T04) OR		SYNC START		
	LD047	**VG197600**	LED	GL3ED8		SP1		01
	LD048	**VG197600**	LED	GL3ED8		START/STOP		01
	LD049	**VT425300**	LED	SLZ-290B-17-T1 GR		VI		01
	LD050	**VT425300**	LED	SLZ-290B-17-T1 GR		BALLROOM PARTY		01
	LD051	**VT425100**	LED	SLZ-190B-17-T1 RE		METRONOME START/STOP		01
*	LD052	**V8966600**	LED (chip)	TLGE1008A(T04) GR		MULTI PAD CONTROL (3)		
*	LD053	**V8966500**	LED (chip)	TLOE1008A(T04) OR		MULTI PAD CONTROL (3)		
*	LD054	**V8966600**	LED (chip)	TLGE1008A(T04) GR		MAIN VARIATION (C)		
*	LD055	**V8966500**	LED (chip)	TLOE1008A(T04) OR		MAIN VARIATION (C)		
*	LD056	**V8966600**	LED (chip)	TLGE1008A(T04) GR		START/STOP		
*	LD057	**V8966500**	LED (chip)	TLOE1008A(T04) OR		START/STOP		
	LD058	**VG197600**	LED	GL3ED8		SP2		01
	LD059	**VT425300**	LED	SLZ-290B-17-T1 GR		POP&ROCK		01
	LD060	**VT425300**	LED	SLZ-290B-17-T1 GR		MOVIE&SHOW		01
*	LD061	**V8966600**	LED (chip)	TLGE1008A(T04) GR		MULTI PAD CONTROL (4)		
*	LD062	**V8966500**	LED (chip)	TLOE1008A(T04) OR		MULTI PAD CONTROL (4)		
*	LD063	**V8966600**	LED (chip)	TLGE1008A(T04) GR		MAIN VARIATION (D)		
*	LD064	**V8966500**	LED (chip)	TLOE1008A(T04) OR		MAIN VARIATION (D)		
	LD065	**VG197600**	LED	GL3ED8		SP3		01
	LD066	**VT425300**	LED	SLZ-290B-17-T1 GR		BALLAD		01
	LD067	**VT425300**	LED	SLZ-290B-17-T1 GR		WORLD		01
*	LD068	**V8966600**	LED (chip)	TLGE1008A(T04) GR		BREAK		
*	LD069	**V8966500**	LED (chip)	TLOE1008A(T04) OR		BREAK		
	R0001	**RD356100**	Carbon Resistor (chip)	1.0K 63M J				01
	R0002	**RD350000**	Carbon Resistor (chip)	0 63M J				01
	R0003	**RD350000**	Carbon Resistor (chip)	0 63M J				01
	R0004	**RD355270**	Carbon Resistor (chip)	270.0 63M J				01
	R0005	**RD354680**	Carbon Resistor (chip)	68.0 63M J				01
	-0011	**RD354680**	Carbon Resistor (chip)	68.0 63M J				01
	R0012	**RD354470**	Carbon Resistor (chip)	47.0 63M J				01
	R0013	**RD350000**	Carbon Resistor (chip)	0 63M J				01
	R0014	**RD350000**	Carbon Resistor (chip)	0 63M J				01
	R0015	**RD354680**	Carbon Resistor (chip)	68.0 63M J				01
	-0022	**RD354680**	Carbon Resistor (chip)	68.0 63M J				01
	R0023	**RD355270**	Carbon Resistor (chip)	270.0 63M J				01
	R0024	**RD355270**	Carbon Resistor (chip)	270.0 63M J				01
	R0025	**RD354680**	Carbon Resistor (chip)	68.0 63M J				01
	R0026	**RD355270**	Carbon Resistor (chip)	270.0 63M J				01
	-0030	**RD355270**	Carbon Resistor (chip)	270.0 63M J				01
	R0031	**RD357100**	Carbon Resistor (chip)	10.0K 63M J				01
	-0035	**RD357100**	Carbon Resistor (chip)	10.0K 63M J				01
	R0038	**RD357100**	Carbon Resistor (chip)	10.0K 63M J				01
	-0044	**RD357100**	Carbon Resistor (chip)	10.0K 63M J				01
	R0049	**RD355270**	Carbon Resistor (chip)	270.0 63M J				01
	-0056	**RD355270**	Carbon Resistor (chip)	270.0 63M J				01
	R0057	**RD357100**	Carbon Resistor (chip)	10.0K 63M J				01
	-0062	**RD357100**	Carbon Resistor (chip)	10.0K 63M J				01
	R0065	**RD357100**	Carbon Resistor (chip)	10.0K 63M J				01
	R0068	**RD355470**	Carbon Resistor (chip)	470.0 63M J				01
	R0069	**RD355470**	Carbon Resistor (chip)	470.0 63M J				01
	R0070	**RD356100**	Carbon Resistor (chip)	1.0K 63M J				01
	R0077	**RD355470**	Carbon Resistor (chip)	470.0 63M J				01
	R0078	**RD354680**	Carbon Resistor (chip)	68.0 63M J				01
	R0079	**RD354680**	Carbon Resistor (chip)	68.0 63M J				01
	R0080	**RD354220**	Carbon Resistor (chip)	22.0 63M J				01
	-0083	**RD354220**	Carbon Resistor (chip)	22.0 63M J				01
	R0084	**RD350000**	Carbon Resistor (chip)	0 63M J				01
	-0088	**RD350000**	Carbon Resistor (chip)	0 63M J				01

*: New Parts

RANK: Japan only

REF NO.	PART NO.	DESCRIPTION			REMARKS	QTY	RANK
R0089	**RD357100**	Carbon Resistor (chip)	10.0K 63M J				01
R0090	**RD354680**	Carbon Resistor (chip)	68.0 63M J				01
-0092	**RD354680**	Carbon Resistor (chip)	68.0 63M J				01
R0093	**RD250000**	Carbon Resistor (chip)	0.0 0.0 J				01
R0095	**RD250000**	Carbon Resistor (chip)	0.0 0.0 J				01
SW001	**V8889300**	Push Switch	EVQ 11Y 07K		VOCAL HARMONY		01
SW001	**VV439800**	Tact Switch	SKQNAJ		VOCAL HARMONY		01
SW002	**V8889300**	Push Switch	EVQ 11Y 07K		SP4		01
SW002	**VV439800**	Tact Switch	SKQNAJ		SP4		01
SW003	**V8889300**	Push Switch	EVQ 11Y 07K		I		01
SW003	**VV439800**	Tact Switch	SKQNAJ		I		01
SW004	**V8889300**	Push Switch	EVQ 11Y 07K		DANCE		01
SW004	**VV439800**	Tact Switch	SKQNAJ		DANCE		01
SW005	**V8889300**	Push Switch	EVQ 11Y 07K		PRESET		01
SW005	**VV439800**	Tact Switch	SKQNAJ		PRESET		01
SW006	**V8889300**	Push Switch	EVQ 11Y 07K		TEMPO (+)		01
SW006	**VV439800**	Tact Switch	SKQNAJ		TEMPO (+)		01
SW007	**V8889300**	Push Switch	EVQ 11Y 07K		INTRO (I)		01
SW007	**VV439800**	Tact Switch	SKQNAJ		INTRO (I)		01
SW008	**V8889300**	Push Switch	EVQ 11Y 07K		ENDING (I)		01
SW008	**VV439800**	Tact Switch	SKQNAJ		ENDING (I)		01
SW009	**V8889300**	Push Switch	EVQ 11Y 07K		TALK		01
SW009	**VV439800**	Tact Switch	SKQNAJ		TALK		01
SW010	**V8889300**	Push Switch	EVQ 11Y 07K		LOOP		01
SW010	**VV439800**	Tact Switch	SKQNAJ		LOOP		01
SW011	**V8889300**	Push Switch	EVQ 11Y 07K		II		01
SW011	**VV439800**	Tact Switch	SKQNAJ		II		01
SW012	**V8889300**	Push Switch	EVQ 11Y 07K		SWING&JAZZ		01
SW012	**VV439800**	Tact Switch	SKQNAJ		SWING&JAZZ		01
SW013	**V8889300**	Push Switch	EVQ 11Y 07K		USER/DISK		01
SW013	**VV439800**	Tact Switch	SKQNAJ		USER/DISK		01
SW014	**V8889300**	Push Switch	EVQ 11Y 07K		TRANSPOSE (-)		01
SW014	**VV439800**	Tact Switch	SKQNAJ		TRANSPOSE (-)		01
SW015	**V8889300**	Push Switch	EVQ 11Y 07K		INTRO (II)		01
SW015	**VV439800**	Tact Switch	SKQNAJ		INTRO (II)		01
SW016	**V8889300**	Push Switch	EVQ 11Y 07K		ENDING (II)		01
SW016	**VV439800**	Tact Switch	SKQNAJ		ENDING (II)		01
SW017	**V8889300**	Push Switch	EVQ 11Y 07K		EFFECT		01
SW017	**VV439800**	Tact Switch	SKQNAJ		EFFECT		01
SW018	**V8889300**	Push Switch	EVQ 11Y 07K		FADE IN/OUT		01
SW018	**VV439800**	Tact Switch	SKQNAJ		FADE IN/OUT		01
SW019	**V8889300**	Push Switch	EVQ 11Y 07K		III		01
SW019	**VV439800**	Tact Switch	SKQNAJ		III		01
SW020	**V8889300**	Push Switch	EVQ 11Y 07K		R&B		01
SW020	**VV439800**	Tact Switch	SKQNAJ		R&B		01
SW021	**V8889300**	Push Switch	EVQ 11Y 07K		ACMP		01
SW021	**VV439800**	Tact Switch	SKQNAJ		ACMP		01
SW022	**V8889300**	Push Switch	EVQ 11Y 07K		TRANSPOSE (+)		01
SW022	**VV439800**	Tact Switch	SKQNAJ		TRANSPOSE (+)		01
SW023	**V8889300**	Push Switch	EVQ 11Y 07K		INTRO (III)		01
SW023	**VV439800**	Tact Switch	SKQNAJ		INTRO (III)		01
SW024	**V8889300**	Push Switch	EVQ 11Y 07K		ENDING (III)		01
SW024	**VV439800**	Tact Switch	SKQNAJ		ENDING (III)		01
SW025	**V8889300**	Push Switch	EVQ 11Y 07K		VH TYPE SELECT		01
SW025	**VV439800**	Tact Switch	SKQNAJ		VH TYPE SELECT		01
SW026	**V8889300**	Push Switch	EVQ 11Y 07K		REC		01
SW026	**VV439800**	Tact Switch	SKQNAJ		REC		01
SW027	**V8889300**	Push Switch	EVQ 11Y 07K		IV		01
SW027	**VV439800**	Tact Switch	SKQNAJ		IV		01
SW028	**V8889300**	Push Switch	EVQ 11Y 07K		COUNTRY		01
SW028	**VV439800**	Tact Switch	SKQNAJ		COUNTRY		01
SW029	**V8889300**	Push Switch	EVQ 11Y 07K		OTS LINK		01
SW029	**VV439800**	Tact Switch	SKQNAJ		OTS LINK		01
SW030	**V8889300**	Push Switch	EVQ 11Y 07K		MULTI PAD CONTROL (1)		01
SW030	**VV439800**	Tact Switch	SKQNAJ		MULTI PAD CONTROL (1)		01
SW031	**V8889300**	Push Switch	EVQ 11Y 07K		MAIN VARIATION (A)		01
SW031	**VV439800**	Tact Switch	SKQNAJ		MAIN VARIATION (A)		01
SW032	**V8889300**	Push Switch	EVQ 11Y 07K		SYNC STOP		01
SW032	**VV439800**	Tact Switch	SKQNAJ		SYNC STOP		01
SW033	**V8889300**	Push Switch	EVQ 11Y 07K		MIC SETTING		01

*: New Parts

RANK: Japan only

	REF NO.	PART NO.	DESCRIPTION			REMARKS	QTY	RANK
	SW033	**VV439800**	Tact Switch	SKQNAJ		MIC SETTING		01
	SW034	**V8889300**	Push Switch	EVQ 11Y 07K		TOP		01
	SW034	**VV439800**	Tact Switch	SKQNAJ		TOP		01
	SW035	**V8889300**	Push Switch	EVQ 11Y 07K		V		01
	SW035	**VV439800**	Tact Switch	SKQNAJ		V		01
	SW036	**V8889300**	Push Switch	EVQ 11Y 07K		MULTI PAD CONTROL (2)		01
	SW036	**VV439800**	Tact Switch	SKQNAJ		MULTI PAD CONTROL (2)		01
	SW037	**V8889300**	Push Switch	EVQ 11Y 07K		AUTO FILL IN		01
	SW037	**VV439800**	Tact Switch	SKQNAJ		AUTO FILL IN		01
	SW038	**V8889300**	Push Switch	EVQ 11Y 07K		LATIN		01
	SW038	**VV439800**	Tact Switch	SKQNAJ		LATIN		01
	SW039	**V8889300**	Push Switch	EVQ 11Y 07K		MAIN VARIATION (B)		01
	SW039	**VV439800**	Tact Switch	SKQNAJ		MAIN VARIATION (B)		01
	SW040	**V8889300**	Push Switch	EVQ 11Y 07K		SYNC START		01
	SW040	**VV439800**	Tact Switch	SKQNAJ		SYNC START		01
	SW041	**V8889300**	Push Switch	EVQ 11Y 07K		SP1		01
	SW041	**VV439800**	Tact Switch	SKQNAJ		SP1		01
	SW042	**V8889300**	Push Switch	EVQ 11Y 07K		START/STOP		01
	SW042	**VV439800**	Tact Switch	SKQNAJ		START/STOP		01
	SW043	**V8889300**	Push Switch	EVQ 11Y 07K		VI		01
	SW043	**VV439800**	Tact Switch	SKQNAJ		VI		01
	SW044	**V8889300**	Push Switch	EVQ 11Y 07K		BALLROOM PARTY		01
	SW044	**VV439800**	Tact Switch	SKQNAJ		BALLROOM PARTY		01
	SW045	**V8889300**	Push Switch	EVQ 11Y 07K		METRONOME START/STOP		01
	SW045	**VV439800**	Tact Switch	SKQNAJ		METRONOME START/STOP		01
	SW046	**V8889300**	Push Switch	EVQ 11Y 07K		MULTI PAD CONTROL (3)		01
	SW046	**VV439800**	Tact Switch	SKQNAJ		MULTI PAD CONTROL (3)		01
	SW047	**V8889300**	Push Switch	EVQ 11Y 07K		MAIN VARIATION (C)		01
	SW047	**VV439800**	Tact Switch	SKQNAJ		MAIN VARIATION (C)		01
	SW048	**V8889300**	Push Switch	EVQ 11Y 07K		START/STOP		01
	SW048	**VV439800**	Tact Switch	SKQNAJ		START/STOP		01
	SW049	**V8889300**	Push Switch	EVQ 11Y 07K		SP2		01
	SW049	**VV439800**	Tact Switch	SKQNAJ		SP2		01
	SW050	**V8889300**	Push Switch	EVQ 11Y 07K		REW		01
	SW050	**VV439800**	Tact Switch	SKQNAJ		REW		01
	SW051	**V8889300**	Push Switch	EVQ 11Y 07K		POP&ROCK		01
	SW051	**VV439800**	Tact Switch	SKQNAJ		POP&ROCK		01
	SW052	**V8889300**	Push Switch	EVQ 11Y 07K		MOVIE&SHOW		01
	SW052	**VV439800**	Tact Switch	SKQNAJ		MOVIE&SHOW		01
	SW053	**V8889300**	Push Switch	EVQ 11Y 07K		TAP TEMPO		01
	SW053	**VV439800**	Tact Switch	SKQNAJ		TAP TEMPO		01
	SW054	**V8889300**	Push Switch	EVQ 11Y 07K		MULTI PAD CONTROL (4)		01
	SW054	**VV439800**	Tact Switch	SKQNAJ		MULTI PAD CONTROL (4)		01
	SW055	**V8889300**	Push Switch	EVQ 11Y 07K		MAIN VARIATION (D)		01
	SW055	**VV439800**	Tact Switch	SKQNAJ		MAIN VARIATION (D)		01
	SW056	**V8889300**	Push Switch	EVQ 11Y 07K		SP3		01
	SW056	**VV439800**	Tact Switch	SKQNAJ		SP3		01
	SW057	**V8889300**	Push Switch	EVQ 11Y 07K		FF		01
	SW057	**VV439800**	Tact Switch	SKQNAJ		FF		01
	SW058	**V8889300**	Push Switch	EVQ 11Y 07K		BALLAD		01
	SW058	**VV439800**	Tact Switch	SKQNAJ		BALLAD		01
	SW059	**V8889300**	Push Switch	EVQ 11Y 07K		WORLD		01
	SW059	**VV439800**	Tact Switch	SKQNAJ		WORLD		01
	SW060	**V8889300**	Push Switch	EVQ 11Y 07K		TEMPO (-)		01
	SW060	**VV439800**	Tact Switch	SKQNAJ		TEMPO (-)		01
	SW061	**V8889300**	Push Switch	EVQ 11Y 07K		STOP		01
	SW061	**VV439800**	Tact Switch	SKQNAJ		STOP		01
	SW062	**V8889300**	Push Switch	EVQ 11Y 07K		BREAK		01
	SW062	**VV439800**	Tact Switch	SKQNAJ		BREAK		01
	TA001	**V3117600**	Transistor Array	M54564FP				04
	-004	**V3117600**	Transistor Array	M54564FP				04
	TA005	**VQ202400**	Transistor Array	TD62785F SOURCE				04
	TA005	**VT943400**	Transistor Array	TD62785F(TP1)				04
	TA006	**VQ202400**	Transistor Array	TD62785F SOURCE				04
	TA006	**VT943400**	Transistor Array	TD62785F(TP1)				04
	TR001	**V5005800**	Digital Transistor	FMG11A T148				01
	TR002	**V5005800**	Digital Transistor	FMG11A T148				01
*	TR003	**WA013100**	Digital Transistor	DTDG23YP				
*	-010	**WA013100**	Digital Transistor	DTDG23YP				
	VR001	**VJ789500**	Rotary Variable Resistor	B 10.0K RK09K113		INPUT VOLUME		01

*: New Parts

RANK: Japan only

	REF NO.	PART NO.	DESCRIPTION			REMARKS	QTY	RANK
	VR002	**VT683100**	Rotary Variable Resistor	A 10.0K RK14K12C		MASTER VOLUME		03
	X0001	**V6150500**	Ceramic Resonator	8.38M EFOS8384E5				01
*		**V8947700**	Circuit Board	PC		(V894760)(X2612B0)		
		--	Jumper Wire	0.55		(VA07890)		
	C0001	**UR827470**	Electrolytic Cap.	47.00 10.0V				01
	C0002	**VC694800**	Semiconductive Cera. Cap.	0.1000 25V Z				01
	-0006	**VC694800**	Semiconductive Cera. Cap.	0.1000 25V Z				01
	C0007	**UR827470**	Electrolytic Cap.	47.00 10.0V				01
	C0008	**VC694800**	Semiconductive Cera. Cap.	0.1000 25V Z				01
	CN001	**LB016030**	Connector	FFC 3P TE				01
	CN002	**VB389900**	Connector Base Post	PH- 3P TE				01
	IC001	**XZ435A00**	IC	NJM2100D		OP AMP		02
	R0001	**HF456100**	Carbon Resistor	1.0K 1/4 J				01
	R0002	**HF456100**	Carbon Resistor	1.0K 1/4 J				01
	R0003	**HF455150**	Carbon Resistor	150.0 1/4 J				01
	R0004	**HF455150**	Carbon Resistor	150.0 1/4 J				01
	R0005	**HF456680**	Carbon Resistor	6.8K 1/4 J				01
	R0006	**HF455150**	Carbon Resistor	150.0 1/4 J				01
	R0007	**HF456100**	Carbon Resistor	1.0K 1/4 J				01
	R0008	**HF457470**	Carbon Resistor	47.0K 1/4 J				01
	R0009	**HF456100**	Carbon Resistor	1.0K 1/4 J				01
	VR001	**V4819100**	Trimmer Potentiometer	B 500.0K 3P VZ0				01
*	VR002	**V7765700**	Trimmer Potentiometer	B 300.0K 3P VZ0				01
*		**V9286200**	Circuit Board	PNC		(V881100)(X2502C0)		
	C0001	**US064100**	Ceramic Capacitor-B (chip)	0.0100 50V K				01
	C0002	**US064100**	Ceramic Capacitor-B (chip)	0.0100 50V K				01
	C0003	**UF118220**	Electrolytic Cap. (chip)	220 6.3V UUR0J2		}		01
*	C0003	**V9816500**	Electrolytic Cap. (chip)	220 10V ECEV1AA221		}		
	C0004	**US064100**	Ceramic Capacitor-B (chip)	0.0100 50V K				01
	CN001	**V5766700**	Connector , FFC	52806 30P TE				01
	D0001	**VT332900**	Diode	1SS355 TE-17				01
	-0030	**VT332900**	Diode	1SS355 TE-17				01
*	LD001	**V8966600**	LED (chip)	TLGE1008A(T04) GR		REGISTRATION MEMORY (4)		
*	LD002	**V8966500**	LED (chip)	TLOE1008A(T04) OR		REGISTRATION MEMORY (4)		
*	LD003	**V8966600**	LED (chip)	TLGE1008A(T04) GR		REGISTRATION MEMORY (5)		
*	LD004	**V8966500**	LED (chip)	TLOE1008A(T04) OR		REGISTRATION MEMORY (5)		
*	LD005	**V8966600**	LED (chip)	TLGE1008A(T04) GR		REGISTRATION MEMORY (6)		
*	LD006	**V8966500**	LED (chip)	TLOE1008A(T04) OR		REGISTRATION MEMORY (6)		
*	LD007	**V8966600**	LED (chip)	TLGE1008A(T04) GR		REGISTRATION MEMORY (1)		
*	LD008	**V8966500**	LED (chip)	TLOE1008A(T04) OR		REGISTRATION MEMORY (1)		
*	LD009	**V8966600**	LED (chip)	TLGE1008A(T04) GR		REGISTRATION MEMORY (7)		
*	LD010	**V8966500**	LED (chip)	TLOE1008A(T04) OR		REGISTRATION MEMORY (7)		
	LD011	**VD180000**	LED	SLZ-190B-03		FREEZE		01
*	LD012	**V8966600**	LED (chip)	TLGE1008A(T04) GR		REGISTRATION MEMORY (2)		
*	LD013	**V8966500**	LED (chip)	TLOE1008A(T04) OR		REGISTRATION MEMORY (2)		
*	LD014	**V8966600**	LED (chip)	TLGE1008A(T04) GR		REGISTRATION MEMORY (8)		
*	LD015	**V8966500**	LED (chip)	TLOE1008A(T04) OR		REGISTRATION MEMORY (8)		
*	LD016	**V8966600**	LED (chip)	TLGE1008A(T04) GR		REGISTRATION MEMORY (3)		
*	LD017	**V8966500**	LED (chip)	TLOE1008A(T04) OR		REGISTRATION MEMORY (3)		
	R0001	**RD355270**	Carbon Resistor (chip)	270.0 63M J				01
	-0008	**RD355270**	Carbon Resistor (chip)	270.0 63M J				01
	R0009	**RD354680**	Carbon Resistor (chip)	68.0 63M J				01
	-0016	**RD354680**	Carbon Resistor (chip)	68.0 63M J				01
	SW001	**V8889300**	Push Switch	EVQ 11Y 07K		} BALANCE		01
	SW001	**VV439800**	Tact Switch	SKQNAJ		} BALANCE		01
	SW002	**V8889300**	Push Switch	EVQ 11Y 07K		} UP (2)		01
	SW002	**VV439800**	Tact Switch	SKQNAJ		} UP (2)		01
	SW003	**V8889300**	Push Switch	EVQ 11Y 07K		} UP (8)		01
	SW003	**VV439800**	Tact Switch	SKQNAJ		} UP (8)		01
	SW004	**V8889300**	Push Switch	EVQ 11Y 07K		} DOWN (6)		01
	SW004	**VV439800**	Tact Switch	SKQNAJ		} DOWN (6)		01
	SW005	**V8889300**	Push Switch	EVQ 11Y 07K		} REGISTRATION MEMORY (4)		01
	SW005	**VV439800**	Tact Switch	SKQNAJ		} REGISTRATION MEMORY (4)		01
	SW006	**V8889300**	Push Switch	EVQ 11Y 07K		} MIXING CONSOLE		01
	SW006	**VV439800**	Tact Switch	SKQNAJ		} MIXING CONSOLE		01
	SW007	**V8889300**	Push Switch	EVQ 11Y 07K		} UP (3)		01
	SW007	**VV439800**	Tact Switch	SKQNAJ		} UP (3)		01
	SW008	**V8889300**	Push Switch	EVQ 11Y 07K		DOWN (1)		01

*: New Parts

RANK: Japan only

REF NO.	PART NO.	DESCRIPTION			REMARKS	QTY	RANK
SW008	**VV439800**	Tact Switch	SKQNAJ		DOWN (1)		01
SW009	**V8889300**	Push Switch	EVQ 11Y 07K		DOWN (7)		01
SW009	**VV439800**	Tact Switch	SKQNAJ		DOWN (7)		01
SW010	**V8889300**	Push Switch	EVQ 11Y 07K		REGISTRATION MEMORY (5)		01
SW010	**VV439800**	Tact Switch	SKQNAJ		REGISTRATION MEMORY (5)		01
SW011	**V8889300**	Push Switch	EVQ 11Y 07K		CHANNEL ON/OFF		01
SW011	**VV439800**	Tact Switch	SKQNAJ		CHANNEL ON/OFF		01
SW012	**V8889300**	Push Switch	EVQ 11Y 07K		UP (4)		01
SW012	**VV439800**	Tact Switch	SKQNAJ		UP (4)		01
SW013	**V8889300**	Push Switch	EVQ 11Y 07K		DOWN (2)		01
SW013	**VV439800**	Tact Switch	SKQNAJ		DOWN (2)		01
SW014	**V8889300**	Push Switch	EVQ 11Y 07K		DOWN (8)		01
SW014	**VV439800**	Tact Switch	SKQNAJ		DOWN (8)		01
SW015	**V8889300**	Push Switch	EVQ 11Y 07K		REGISTRATION MEMORY (6)		01
SW015	**VV439800**	Tact Switch	SKQNAJ		REGISTRATION MEMORY (6)		01
SW016	**V8889300**	Push Switch	EVQ 11Y 07K		REGIST BANK		01
SW016	**VV439800**	Tact Switch	SKQNAJ		REGIST BANK		01
SW017	**V8889300**	Push Switch	EVQ 11Y 07K		UP (5)		01
SW017	**VV439800**	Tact Switch	SKQNAJ		UP (5)		01
SW018	**V8889300**	Push Switch	EVQ 11Y 07K		DOWN (3)		01
SW018	**VV439800**	Tact Switch	SKQNAJ		DOWN (3)		01
SW019	**V8889300**	Push Switch	EVQ 11Y 07K		REGISTRATION MEMORY (1)		01
SW019	**VV439800**	Tact Switch	SKQNAJ		REGISTRATION MEMORY (1)		01
SW020	**V8889300**	Push Switch	EVQ 11Y 07K		REGISTRATION MEMORY (7)		01
SW020	**VV439800**	Tact Switch	SKQNAJ		REGISTRATION MEMORY (7)		01
SW021	**V8889300**	Push Switch	EVQ 11Y 07K		FREEZE		01
SW021	**VV439800**	Tact Switch	SKQNAJ		FREEZE		01
SW022	**V8889300**	Push Switch	EVQ 11Y 07K		UP (6)		01
SW022	**VV439800**	Tact Switch	SKQNAJ		UP (6)		01
SW023	**V8889300**	Push Switch	EVQ 11Y 07K		DOWN (4)		01
SW023	**VV439800**	Tact Switch	SKQNAJ		DOWN (4)		01
SW024	**V8889300**	Push Switch	EVQ 11Y 07K		REGISTRATION MEMORY (2)		01
SW024	**VV439800**	Tact Switch	SKQNAJ		REGISTRATION MEMORY (2)		01
SW025	**V8889300**	Push Switch	EVQ 11Y 07K		REGISTRATION MEMORY (8)		01
SW025	**VV439800**	Tact Switch	SKQNAJ		REGISTRATION MEMORY (8)		01
SW026	**V8889300**	Push Switch	EVQ 11Y 07K		UP (1)		01
SW026	**VV439800**	Tact Switch	SKQNAJ		UP (1)		01
SW027	**V8889300**	Push Switch	EVQ 11Y 07K		UP (7)		01
SW027	**VV439800**	Tact Switch	SKQNAJ		UP (7)		01
SW028	**V8889300**	Push Switch	EVQ 11Y 07K		DOWN (5)		01
SW028	**VV439800**	Tact Switch	SKQNAJ		DOWN (5)		01
SW029	**V8889300**	Push Switch	EVQ 11Y 07K		REGISTRATION MEMORY (3)		01
SW029	**VV439800**	Tact Switch	SKQNAJ		REGISTRATION MEMORY (3)		01
SW030	**V8889300**	Push Switch	EVQ 11Y 07K		MEMORY		01
SW030	**VV439800**	Tact Switch	SKQNAJ		MEMORY		01
TA001	**V3117600**	Transistor Array	M54564FP				04
TA002	**V3117600**	Transistor Array	M54564FP				04
*	**V9640900**	Circuit Board	REG		(V964100)(X3184A0)		
	--	Jumper Wire	0.55		(VA07890)		
10	**EP600190**	Bind Head Tapping Screw-B	3.0X8 MFZN2BL				01
C0001	**VC694800**	Semiconductive Cera. Cap.	0.1000 25V Z				01
-0003	**VC694800**	Semiconductive Cera. Cap.	0.1000 25V Z				01
C0004	**UR827470**	Electrolytic Cap.	47.00 10.0V				01
-0006	**UR827470**	Electrolytic Cap.	47.00 10.0V				01
CN001	**LB918040**	Base Post Connector	XH 4P TE				01
CN002	**LB918070**	Base Post Connector	XH 7P TE				01
D0001	**VB941200**	Diode	1SS133,1SS176				01
-0003	**VB941200**	Diode	1SS133,1SS176				01
HS001	**--**	Heat Sink			(V970930)		
IC001	**XW196A00**	IC	UPC2933HF		REGULATOR +3.3V		03
-003	**XW196A00**	IC	UPC2933HF		REGULATOR +3.3V		03
	VC843500	Push Switch	SDDLB1216A J.U.C.S		POWER ON/OFF		03
	V6492300	Floppy Disk Drive	ALPS DF354H				13
	V5557500	Power Supply Unit	CE,U,CS				20
⚠							
	V3413600	Rubber Contact	16N-2M OCT 2M		C1-B1,C2-B2,C3-B3,C4-B4	4	04

*: New Parts

RANK: Japan only

REF NO.	PART NO.	DESCRIPTION			REMARKS	QTY	RANK
	V7477400	Rubber Contact	16N-2M 13K 2M		C5-C6		04
	V7182100	LCD	EDMGRB8KMF				52
	VT695100	Rotary Variable Resistor	10.0K RK163111		PITCH BEND,MODULATION	2	03

*: New Parts

RANK: Japan only

MONITOR SPEAKER

TRS-MS01

■ **CONTENTS**

OVERALL ASSEMBLY 2
ELECTRICAL PARTS 4

Note) DESTINATION ABBREVIATIONS

A:	Australian model	O:	Chinese model
B:	British model	Q:	South-east Asia model
C:	Canadian model	T:	Taiwan model
D:	German model	U:	U.S.A. model
E:	European model	V:	General export model (110V)
F:	French model	W:	General export model (220V)
H:	North European model	N,X:	General export model
I:	Indonesian model	Y:	Export model
J:	Japanese model	K:	Korean model
M:	South African model		

■ WARNING

Components having special characteristics are marked ⚠ and must be replaced with parts having specifications equal to those originally installed.

■ The numbers in “QTY” shows quantities for each unit.
■ The parts with “--” in “Part No.” are not available as spare parts.
■ The second letter of the shaded ( ) part number is I, not one.
■ The second letter of the shaded ( ) part number is O, not zero.

■ OVERALL ASSEMBLY

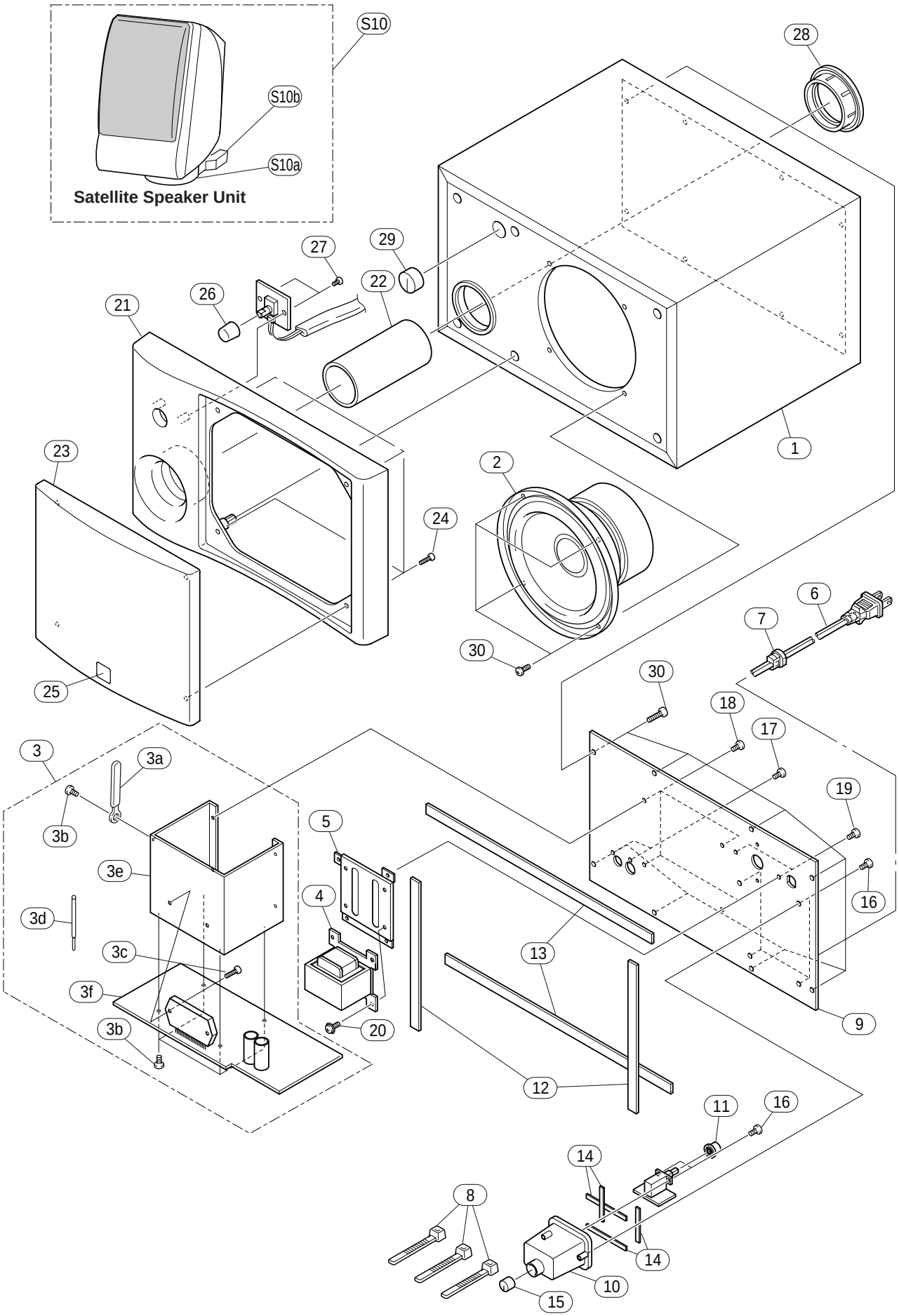

● ACCESSORIES

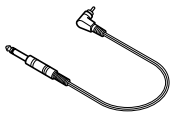

(a) Satellite SP Cable (RCA pin cables)

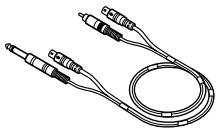

(b) Sub Woofer Cable (RCA pin/8-pin combination cable)

(c) Stand Assembly (Speaker brackets)

	REF NO.	PART NO.	DESCRIPTION			REMARKS		QTY	RANK
			WOOFER SPEAKER SYSTEM						
*	1	AAX40890	Cabinet Assembly	Silver			366351		
*	2	X2009A00	Woofer	16cm Cone type			353214		
	3	--	AMP Assembly						
	3a	CB817510	Cord Binder	50mm			056560		03
	3b	EP600280	Bind Head Tapping Screw-B	3x8 MFZC2Y			075636	5	01
	3c	EI030166	Bind Head Tapping Screw-B	3x16 MFZC2Y			075646	2	01
	3d	--	MISC Cord Clip	CS-5U			(350093)		
	3e	--	Heat Sink	A165A1			(353378)		
*	3f	AAX40900	Circuit Board	MAIN	J	J	364543		
*	3f	AAX40910	Circuit Board	MAIN	UC	U	364544		
*	3f	AAX40920	Circuit Board	MAIN	GBR	B	364545		
*	3f	AAX40930	Circuit Board	MAIN	E	E	364546		
*	3f	AAX40940	Circuit Board	MAIN	AUS	A	368190		
⚠ *	4	X3223A00	Power Transformer	A165A1-1 J		J	353130		
⚠ *	4	X2113A00	Power Transformer	A165B1-1 UC		U	353131		
⚠ *	4	X2115A00	Power Transformer	A165E1-1 BG		B,E	353133		
⚠ *	4	X2114A00	Power Transformer	A165D1-1 A		A	353132		
	5	--	Bracket, Trans				(353523)		
⚠ *	6	V8723400	Power Cord	AC J 2m PHP-212		J	355103		
⚠ *	6	V8366300	Power Cord	AC U/ C/ H.R.S		U	353587		
⚠ *	6	V9014100	Power Cord	AC B 2m PHP-330		B	360577		
⚠ *	6	V8366400	Power Cord	AC G 2m PHP-205		E	355106		
⚠ *	6	V8366500	Power Cord	AC A 2m PHP-208		A	355104		
	7	CB072750	Cord Stopper	SR-4N-4			078569		01
	8	CB069250	Binding Tie	BK-1			080558	4	01
*	9	AAX40960	Rear Panel			J	365333		
*	9	AAX40970	Rear Panel			U	365334		
*	9	AAX40980	Rear Panel			B,E	365335		
*	9	AAX40990	Rear Panel			A	369351		
	10	AAX31050	Cover	Black			352528		03
	11	AAX31020	Button, Power	Black		POWER ON/OFF	352529		01
	12	V2583100	Packing, A				044414	4	03
	13	V2583200	Packing, B				044415	4	04
	14	AAX31130	Packing, Mold	5X55			335431	4	
	15	VZ655300	Bush	Black			084849		01
	16	EN335030	Bind Head Bonding Screw-B	3x10 MFC2BL			075321	4	01
	17	EX601360	Bind Head Screw-P	3x12 MFC2BL			075642	2	01
	18	ED330086	Bind Head Screw	3x8 MFC2BL			075243	4	01
	19	EK396010	Bind Head Screw-S	4x8 MFC2BL			075180	4	01
*	20	AAX41000	Pan head Screw	4x6			075392	4	
*	21	AAX41010	Front Panel	Silver			366354		
	22	V3374600	Port				050337		01
*	23	AAX31150	Front Grille Assembly	Silver			353371		
	24	EP600270	Bind Head Screw-P	3x10 MFZN2Y			018077	4	01
	25	V3371600	Emblem	Blue			045475		01
*	26	AAX41020	Knob, Volume	Silver		BASS	366355		
	27	EP600280	Bind Head Tapping Screw-B	3x8 MFZC2Y			075636	2	01
	28	V2490000	Port Ring	Black			044359		
	29	VZ655300	Bush	Black			084849		01
	30	EP040070	Bind Head Tapping Screw	4x20 MFZN2BL			021385	12	01
*	S10	AAX41030	Satellite Speaker Unit				364584	2	
*	S10a	AAX41040	Speaker Table				365301		
*	S10b	AAX41050	Lever				365302		
			ACCESSORIES						
*	a	AAX41060	Satellite SP Cable	0.3m 1pc			368888	2	
*	b	AAX41070	Sub Woofer Cable	Phono-RCA/DIN 1.8m			369159		
*	c	AAX41080	Stand Assembly	Speaker bracket			366581	2	

*: New Parts（新規部品）

RANK: Japan only

■ ELECTRICAL PARTS

	REF NO.	PART NO.	DESCRIPTION			REMARKS	QTY	RANK
			ELECTRICAL PARTS					
*		**AAX40900**	Circuit Board	MAIN J		J 364543		
*		**AAX40910**	Circuit Board	MAIN UC		U 364544		
*		**AAX40920**	Circuit Board	MAIN GBR		B 364545		
*		**AAX40930**	Circuit Board	MAIN E		E 364546		
*		**AAX40940**	Circuit Board	MAIN AUS		A 368190		
⚠	C9	**VS741700**	Recognized Ceramic Cap.	0.01 275V				01
	C10	**VF964800**	Electrolytic Capacitor	100 16V				01
	C11	**UA654330**	Mylar Film Capacitor	0.033 50V				01
	C12	**UA654330**	Mylar Film Capacitor	0.033 50V				01
	C13	**VJ836900**	Electrolytic Capacitor	10.0 16V				01
	C14	**UA654330**	Mylar Film Capacitor	0.033 50V				01
	C15	**UA654330**	Mylar Film Capacitor	0.033 50V				01
	C16	**VJ836900**	Electrolytic Capacitor	10.0 16V				01
	C17	**UR759470**	Electrolytic Capacitor	4700.0 35V				04
	C18	**UR857470**	Electrolytic Capacitor	47.0 35V				01
	C19	**UR759470**	Electrolytic Capacitor	4700.0 35V				04
	C20	**UR857470**	Electrolytic Capacitor	47.0 35V				01
	C21	**FG212470**	Ceramic Capacitor	470P 50V				01
	C22	**FG212470**	Ceramic Capacitor	470P 50V				01
	C23	**UA655100**	Mylar Film Capacitor	0.1 50V				01
	C24	**VJ836900**	Electrolytic Capacitor	10.0 16V				01
	C25	**UR866220**	Electrolytic Capacitor	2.20 50V				01
	C26	**UR867100**	Electrolytic Capacitor	10.0 50V				01
	C27	**UR866220**	Electrolytic Capacitor	2.20 50V				01
	C28	**VJ836900**	Electrolytic Capacitor	10.0 16V				01
	C29	**UR867100**	Electrolytic Capacitor	10.0 50V				01
	C30	**UA655100**	Mylar Film Capacitor	0.1 50V				01
	C31	**UM397330**	Electrolytic Capacitor	33.0 16V				01
	C32	**UA655150**	Mylar Film Capacitor	0.15 50V				01
	C33	**UA655390**	Mylar Film Capacitor	0.39 50V				01
	C34	**UJ668100**	Electrolytic Capacitor	100.0 50V				01
	C35	**UJ668100**	Electrolytic Capacitor	100.0 50V				01
	C36	**UM397330**	Electrolytic Capacitor	33.0 16V				01
	C37	**FG211150**	Ceramic Capacitor	15P 50V				01
	C38	**FG211150**	Ceramic Capacitor	15P 50V				01
	C39	**UA655100**	Mylar Film Capacitor	0.1 50V				01
	C40	**VJ837200**	Electrolytic Capacitor	47.0 16V				01
	C41	**VJ837200**	Electrolytic Capacitor	47.0 16V				01
	C42	**UM397330**	Electrolytic Capacitor	33.0 16V				01
	C43	**UA653390**	Mylar Film Capacitor	3900P 50V				01
	C44	**UA655180**	Mylar Film Capacitor	0.18 50V				01
	C45	**UA653470**	Mylar Film Capacitor	4700P 50V				01
	C48	**UA654470**	Mylar Film Capacitor	0.047 50V				01
	C49	**UA654470**	Mylar Film Capacitor	0.047 50V				01
	C56	**UA655100**	Mylar Film Capacitor	0.1 50V				01
	C57	**UA655100**	Mylar Film Capacitor	0.1 50V				01
	C58	**UA655470**	Mylar Film Capacitor	0.47 50V				01
	C59	**UA655100**	Mylar Film Capacitor	0.1 50V				01
	C60	**VJ836900**	Electrolytic Capacitor	10.0 16V				01
	C61	**VJ836900**	Electrolytic Capacitor	10.0 16V				01
	CB4	**VD004600**	Connector, Base Pin	3P				01
	CB5	**VP206500**	Fuse Holder	EYF-52BC				01
	CB6	**VP206500**	Fuse Holder	EYF-52BC				01
⚠	D2	**VC971500**	Diode Bridge	RBV-402 4.0A 200V				03
	D3	**IF004600**	Diode	1N4148				01
	D4	**IF004600**	Diode	1N4148				01
	D5	**IF004600**	Diode	1N4148				01
	D6	**IF004600**	Diode	1N4148				01
	D7	**IF004600**	Diode	1N4148				01
	D8	**IF004600**	Diode	1N4148				01
⚠	F1	**AAX10930**	Fuse	2A 125V		J		03
⚠	F1	**VT951300**	Fuse	2A 250V		U		01
⚠	F1	**KB000660**	Fuse	400mA 250V		B,E,A		02
	IC1	**XN324A00**	IC	KIA4558P		OP AMP		03
	IC2	**XN324A00**	IC	KIA4558P		OP AMP		03
	IC4	**XJ602A00**	IC	KIA7812AP		REGULATOR +12V		02
	IC5	**XD343A00**	IC	KIA7912AP		REGULATOR -12V		03
⚠	IC6	**XV809A00**	IC	STK408-040E 25W		POWER AMP		11
	IC7	**XN324A00**	IC	KIA4558P		OP AMP		03

*: New Parts

RANK: Japan only

REF NO.	PART NO.	DESCRIPTION			REMARKS	QTY	RANK
JK5	**VV881000**	Connector, DIN	8P CMS5008-0101		TO KEYBOARD		05
PJ1	**V3407500**	Jack, Pin	1P MSP-241V		TO KEYBOARD		02
PJ2	**VU581900**	Jack, Pin	MTJ-032-04B-01		TO KEYBOARD L/R		01
Q3	**IA101590**	Transistor	KTA1266(GP)				01
Q4	**IC1815M0**	Transistor	KTC3198(GR)				01
Q5	**IA101590**	Transistor	KTA1266(GR)				01
Q6	**IC1815M0**	Transistor	KTC3198(GR)				01
Q7	**IA101590**	Transistor	KTA1266(GR)				01
Q8	**V3028000**	FET	2SK304 E				01
R22	**HF456470**	Carbon Resistor	4.7K 1/6W				01
R23	**HF457680**	Carbon Resistor	68K 1/6W				01
R24	**HF457330**	Carbon Resistor	33K 1/6W				01
R25	**HF457680**	Carbon Resistor	68K 1/6W				01
R26	**HF457330**	Carbon Resistor	33K 1/6W				01
R27	**HF456820**	Carbon Resistor	8.2K 1/6W				01
R28	**HF456820**	Carbon Resistor	8.2K 1/6W				01
R29	**HF457150**	Carbon Resistor	15K 1/6W				01
R30	**HF456150**	Carbon Resistor	1.5K 1/6W				01
R31	**HF456150**	Carbon Resistor	1.5K 1/6W				01
R32	**HF457220**	Carbon Resistor	22K 1/6W				01
R33	**HF455470**	Carbon Resistor	470 1/6W				01
R34	**HF457560**	Carbon Resistor	56K 1/6W				01
R35	**HF457560**	Carbon Resistor	56K 1/6W				01
R36	**HF456470**	Carbon Resistor	4.7K 1/6W				01
R37	**HV455100**	Flame Proof Carbon Res.	100.0 1/4W				01
R38	**HV455100**	Flame Proof Carbon Res.	100.0 1/4W				01
R39	**HV453470**	Flame Proof Carbon Res.	4.7 1/4W				01
R40	**HF456470**	Carbon Resistor	4.7K 1/6W				01
R41	**HF454100**	Carbon Resistor	10 1/6W				01
R42	**HF456180**	Carbon Resistor	1.8K 1/6W				01
R43	**HF457390**	Carbon Resistor	39K 1/6W				01
R44	**HF457390**	Carbon Resistor	39K 1/6W				01
R45	**HF457390**	Carbon Resistor	39K 1/6W				01
R46	**HV453470**	Flame Proof Carbon Res.	4.7 1/4W				01
R47	**HF456180**	Carbon Resistor	1.8K 1/6W				01
R48	**HF456180**	Carbon Resistor	1.8K 1/6W				01
R49	**HF455470**	Carbon Resistor	470 1/6W				01
R50	**HF458100**	Carbon Resistor	100K 1/6W				01
R51	**HF458100**	Carbon Resistor	100K 1/6W				01
R52	**HF455470**	Carbon Resistor	470 1/6W				01
R53	**HF456180**	Carbon Resistor	1.8K 1/6W				01
R54	**HF457680**	Carbon Resistor	68K 1/6W				01
R55	**HV456100**	Flame Proof Carbon Res.	1.0K 1/4W				01
R56	**HF457680**	Carbon Resistor	68K 1/6W				01
R57	**HV454820**	Flame Proof Carbon Res.	82.0 1/4W				01
R58	**HV453470**	Flame Proof Carbon Res.	4.7 1/4W				01
R59	**VE869300**	Metal Oxide Film Resistor	0.1 2W				01
R60	**HV453100**	Flame Proof Carbon Res.	1.0 1/4W				01
⚠ R61	**HV453100**	Flame Proof Carbon Res.	1.0 1/4W				01
R62	**HF457470**	Carbon Resistor	47K 1/6W				01
R63	**HF456100**	Carbon Resistor	1K 1/6W				01
R64	**HF456100**	Carbon Resistor	1K 1/6W				01
R69	**HF459100**	Carbon Resistor	1M 1/6W				01
R70	**HF457100**	Carbon Resistor	10K 1/6W				01
R71	**HF457200**	Carbon Resistor	20K 1/6W				01
R72	**HF457100**	Carbon Resistor	10K 1/6W				01
R73	**HF458180**	Carbon Resistor	180K 1/6W				01
R74	**HF457100**	Carbon Resistor	10K 1/6W				01
R75	**HF455390**	Carbon Resistor	390 1/6W				01
R76	**HF454100**	Carbon Resistor	10 1/6W				01
R77	**HF458150**	Carbon Resistor	150K 1/6W				01
R78	**HF458150**	Carbon Resistor	150K 1/6W				01
R79	**HJ358220**	Carbon Resistor	220K 1/6W				01
R80	**HF455100**	Carbon Resistor	100 1/6W				01
R81	**HF455100**	Carbon Resistor	100 1/6W				01
R82	**HF455470**	Carbon Resistor	470 1/6W				01
R83	**HF455470**	Carbon Resistor	470 1/6W				01
R85	**--**	Carbon Resistor	0.55		(VD04170)		
R86	**--**	Carbon Resistor	0.55		(VD04170)		
R87	**--**	Carbon Resistor	0.55		(VD04170)		

*: New Parts

RANK: Japan only

	REF NO.	PART NO.	DESCRIPTION			REMARKS		QTY	RANK
⚠	SW2	**AAX31140**	Power Switch	SY16-52-4		POWER ON/OFF	354986		05
	VR2	**VZ496100**	Rotary Potentiometer	A5K		BASS			04
*		**X2009A00**	Woofer	16cm Cone type			353214		
⚠ *		**X3223A00**	Power Transformer	A165A1-1 J		J	353130		
⚠ *		**X2113A00**	Power Transformer	A165B1-1 UC		U	353131		
⚠ *		**X2115A00**	Power Transformer	A165E1-1 BG		B,E	353133		
⚠ *		**X2114A00**	Power Transformer	A165D1-1 A		A	353132		
⚠ *		**V8723400**	Power Cord	AC J 2m PHP-212		J	355103		
⚠ *		**V8366300**	Power Cord	AC U/ C/ H.R.S		U	353587		
⚠ *		**V9014100**	Power Cord	AC B 2m PHP-330		B	360557		
⚠ *		**V8366400**	Power Cord	AC G 2m PHP-205		E	355106		
⚠ *		**V8366500**	Power Cord	AC A 2m PHP-208		A	355104		

*: New Parts

RANK: Japan only

■ Tyros BLOCK DIAGRAM 1/10

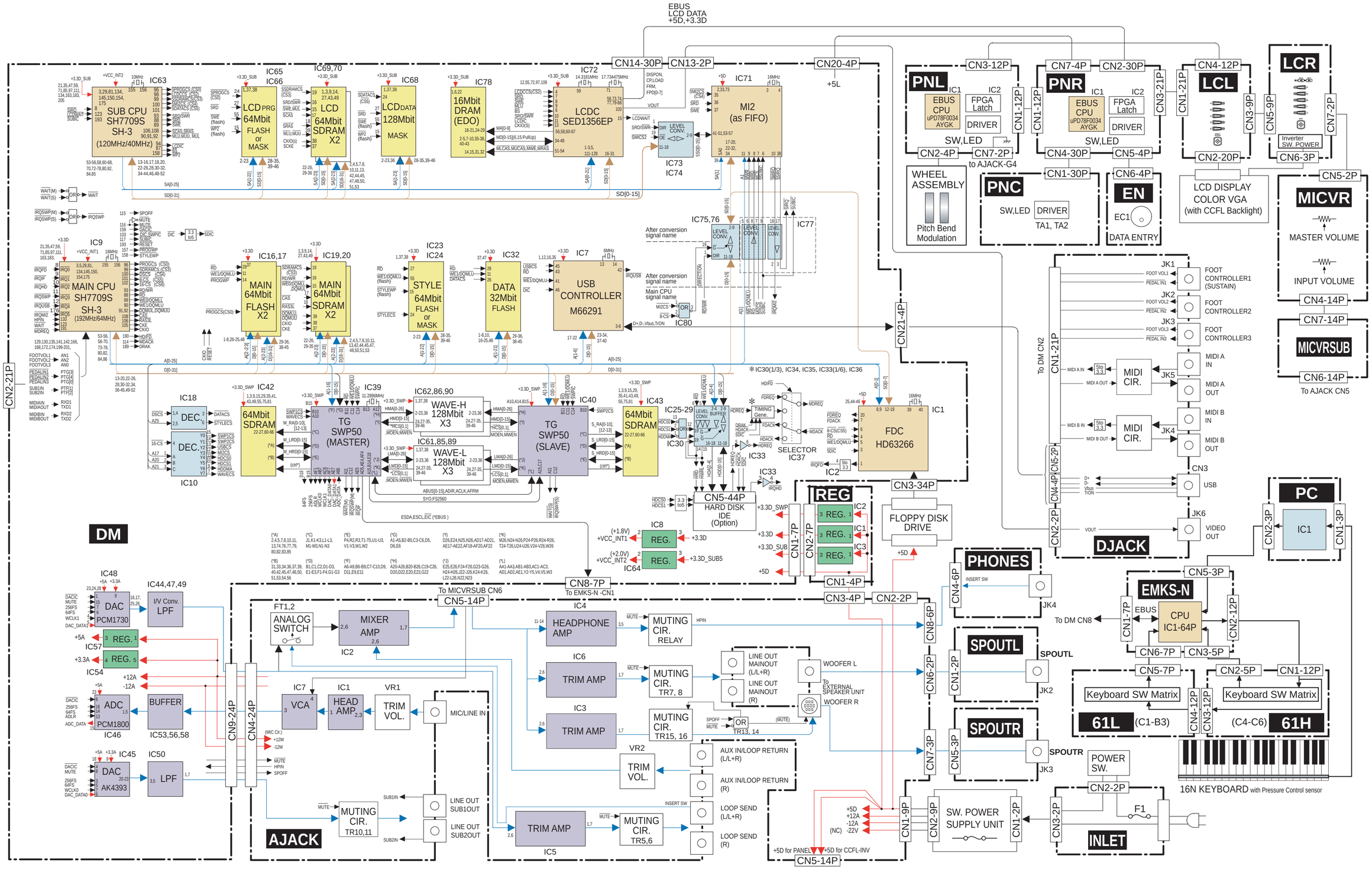

Tyros

■ Tyros OVERALL CIRCUIT DIAGRAM 2/10 (DM 1/4)

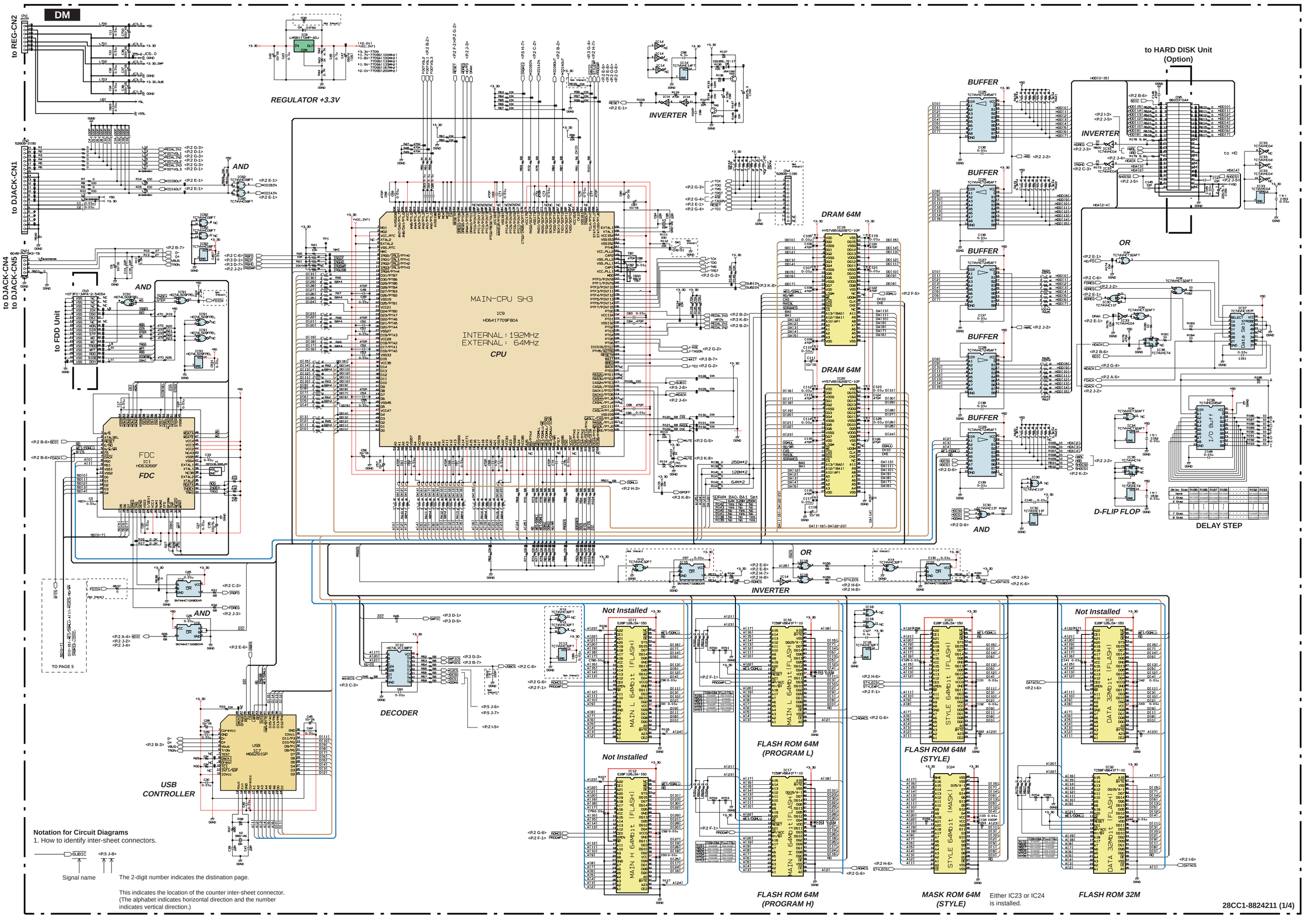

Notation for Circuit Diagrams

1. How to identify inter-sheet connectors.

Signal name — The 2-digit number indicates the distination page.

This indicates the location of the counter inter-sheet connector. (The alphabet indicates horizontal direction and the number indicates vertical direction.)

Either IC23 or IC24 is installed.

28CC1-8824211 (1/4)

(セ) : Ceramic Capacitor **Note: See parts list for details of circuit baord component parts.**

■ Tyros OVERALL CIRCUIT DIAGRAM 3/10 (DM 2/4)

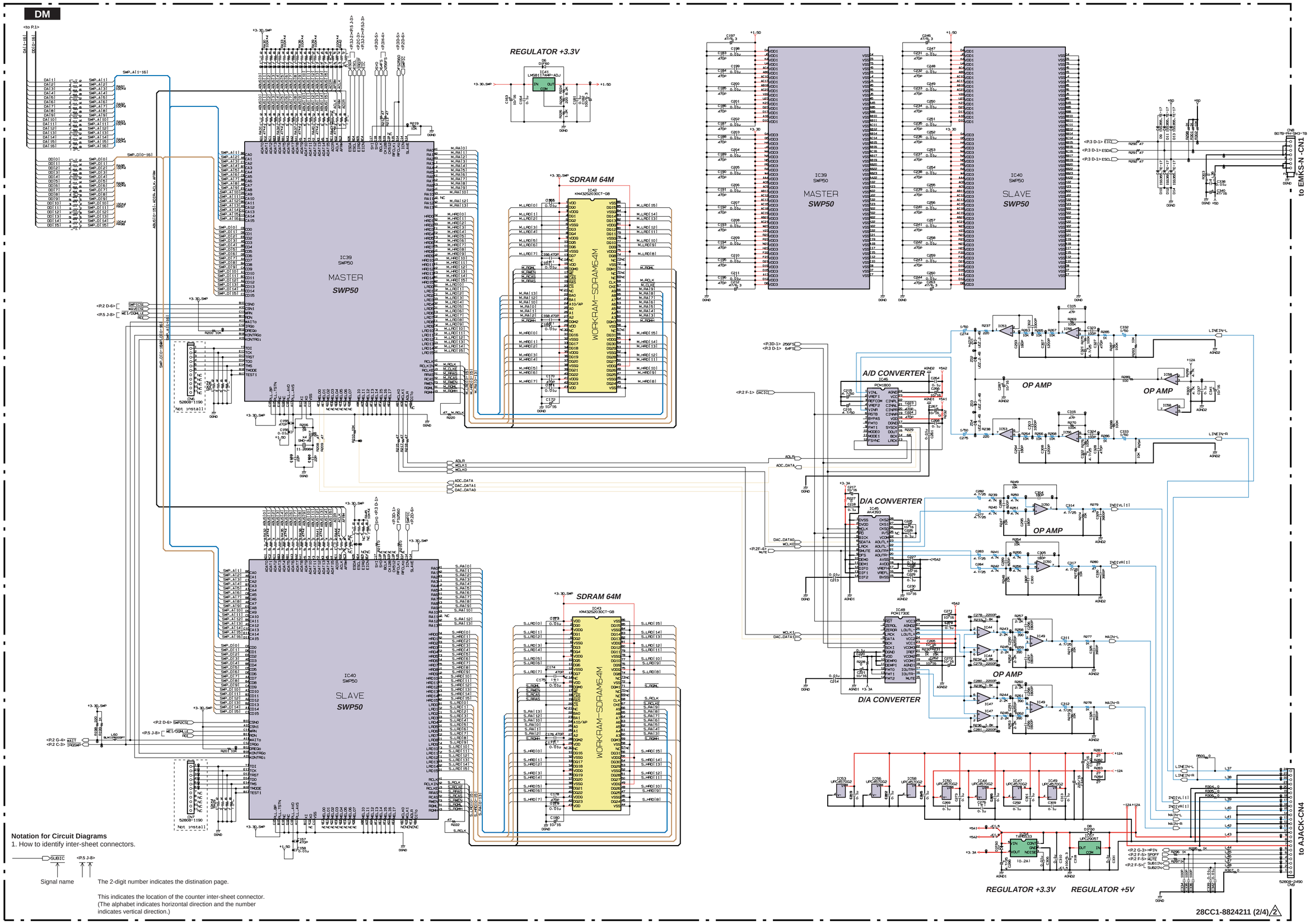

Notation for Circuit Diagrams

1. How to identify inter-sheet connectors.

The 2-digit number indicates the distination page.

This indicates the location of the counter inter-sheet connector. (The alphabet indicates horizontal direction and the number indicates vertical direction.)

28CC1-8824211 (2/4)

(セ) : Ceramic Capacitor **Note: See parts list for details of circuit baord component parts.**

■ Tyros OVERALL CIRCUIT DIAGRAM 4/10 (DM 3/4)

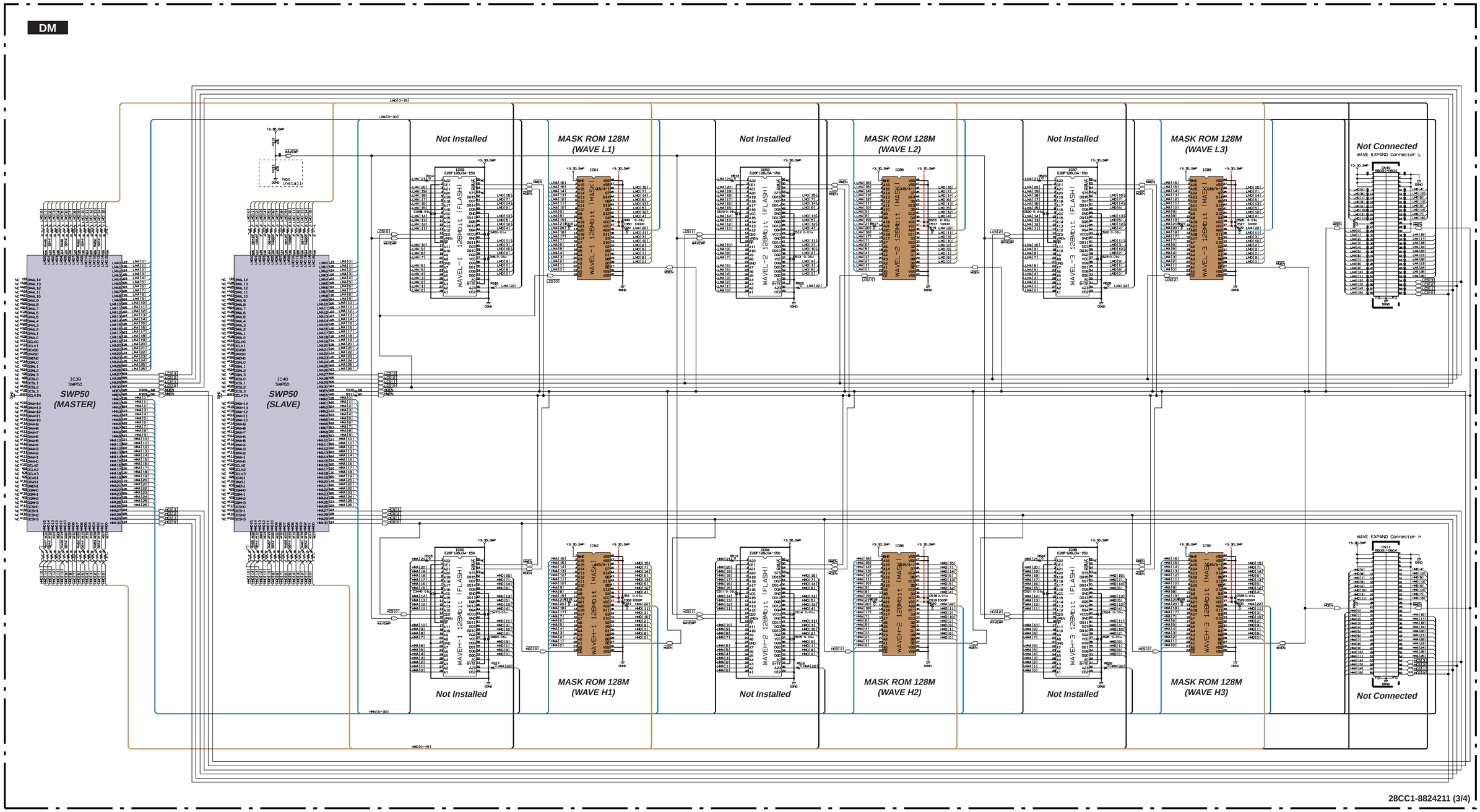

Notation for Circuit Diagrams

1. How to identify inter-sheet connectors.

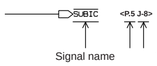

Signal name

The 2-digit number indicates the distination page.

This indicates the location of the counter inter-sheet connector. (The alphabet indicates horizontal direction and the number indicates vertical direction.)

• **μPC2905T-E1**(XV492A00) REGULATOR +5V DM: IC57	• **LMS8117AMP-ADJ** (X0609A00) REGULATOR DM: IC8, IC41, IC64	• **TAR5S33** (XZ642A00) REGULATOR +3.3V DM: IC54	• **μPC2933HF** (XW196A00) REGULATOR +3.3V DM: IC1, IC2	•**1SS355** (VT332900) DIODE	• **UDZ-2.4B** (V9312600) ZENER DIODE
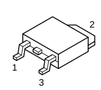	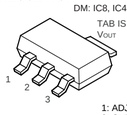	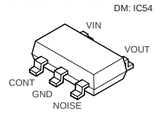	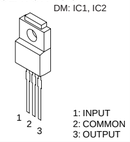		
1: INPUT 2: COMMON 3: OUTPUT	1: ADJ/GND 2: OUTPUT 3: INPUT		1: INPUT 2: COMMON 3: OUTPUT	1: ANODE 2: CATHODE	1: ANODE 2: CATHODE

Note: See parts list for details of citcuit baord component parts.

■ Tyros OVERALL CIRCUIT DIAGRAM 5/10 (DM 4/4)

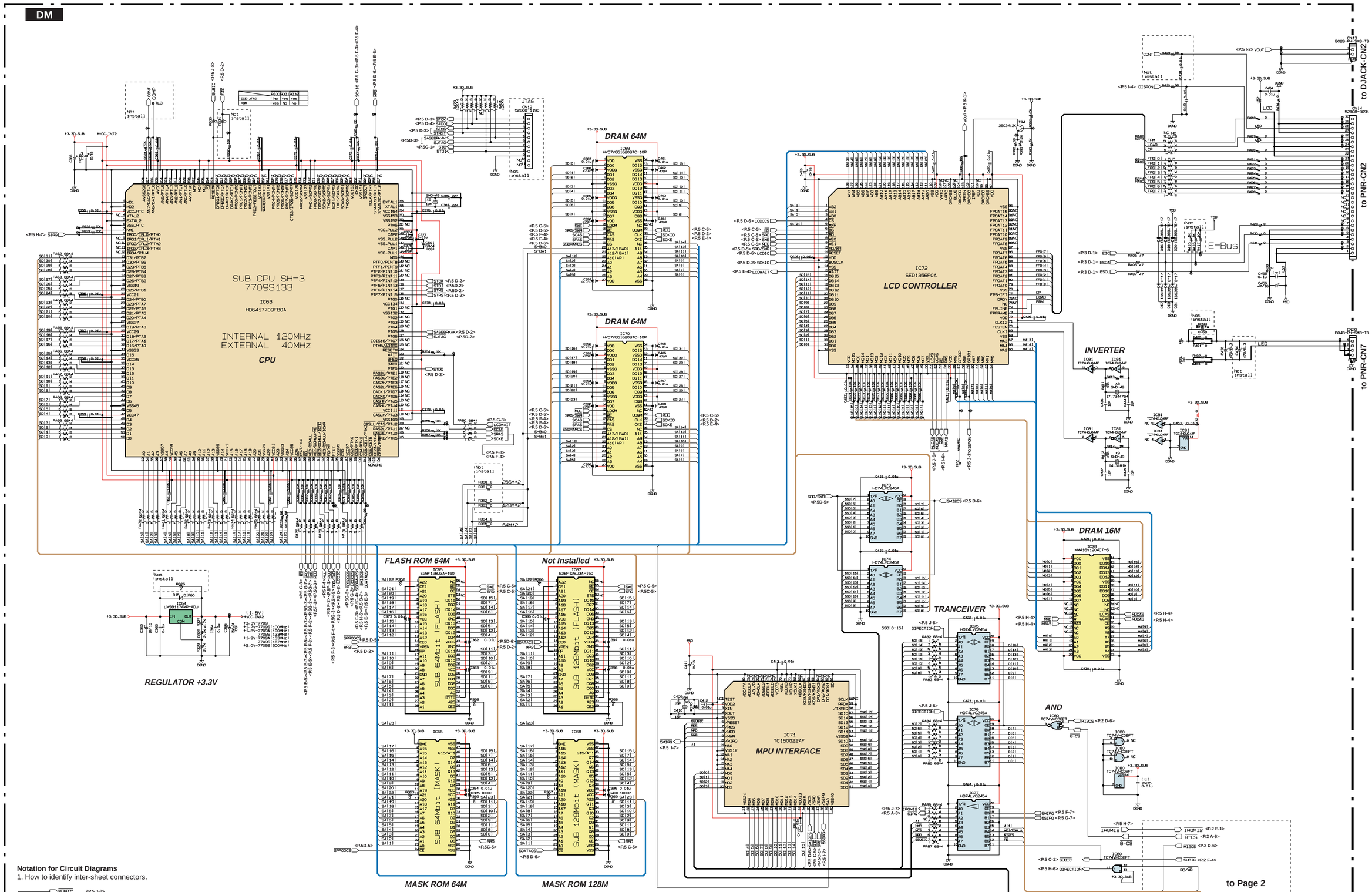

Notation for Circuit Diagrams

1. How to identify inter-sheet connectors.

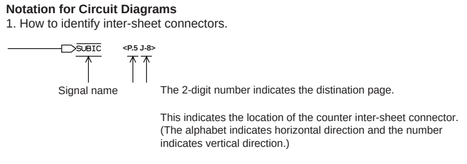

（セ）： Ceramic Capacitor
（酸金1W）： Metal Oxide Film Resistor

Note: See parts list for details of citcuit baord component parts.

■ Tyros OVERALL CIRCUIT DIAGRAM 6/10 (PNL)

Tyros

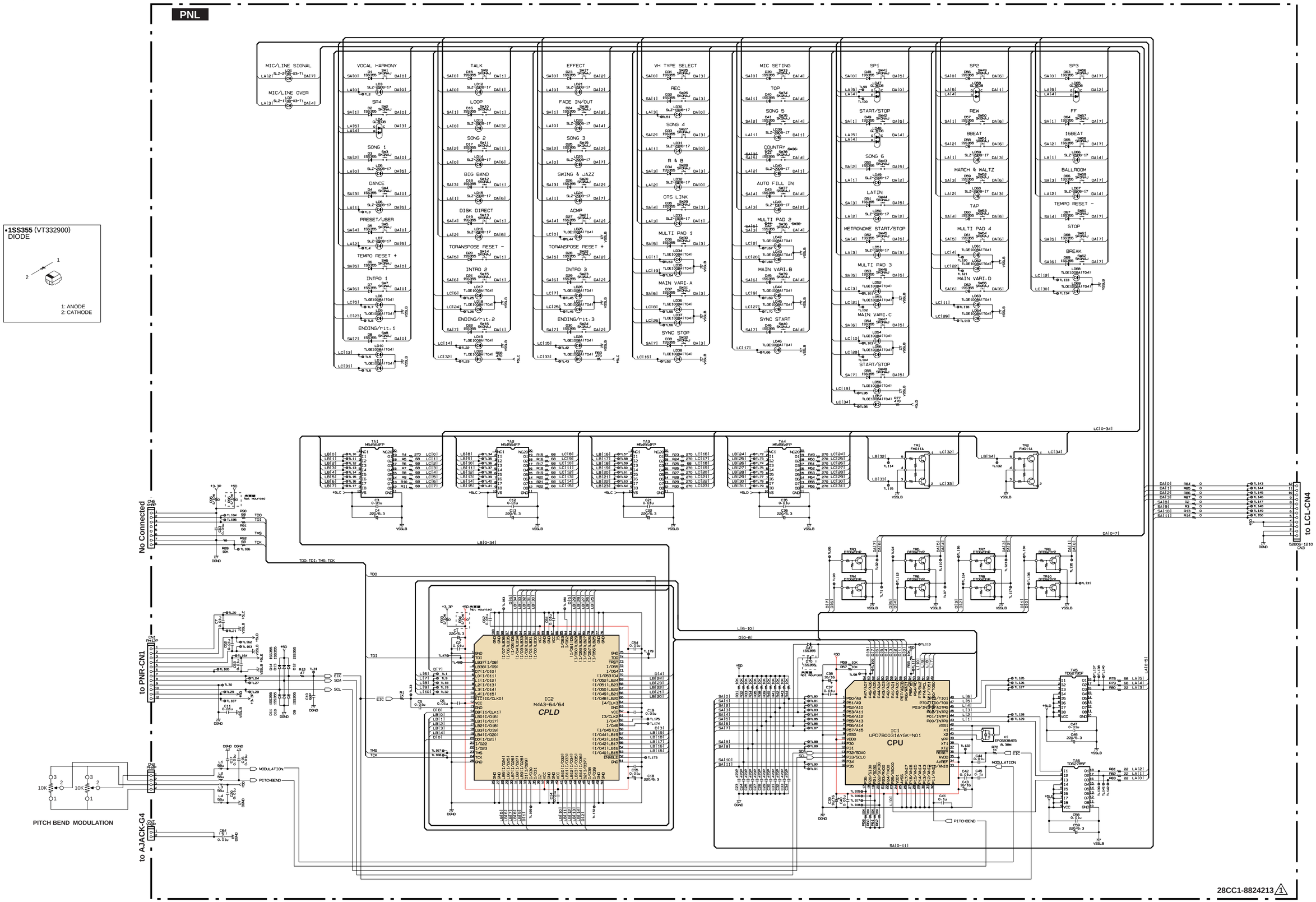

Tyros

(セ) : Ceramic Capacitor

Note: See parts list for details of citcuit baord component parts.

Tyros

■ Tyros OVERALL CIRCUIT DIAGRAM 7/10 (PNR, EN)

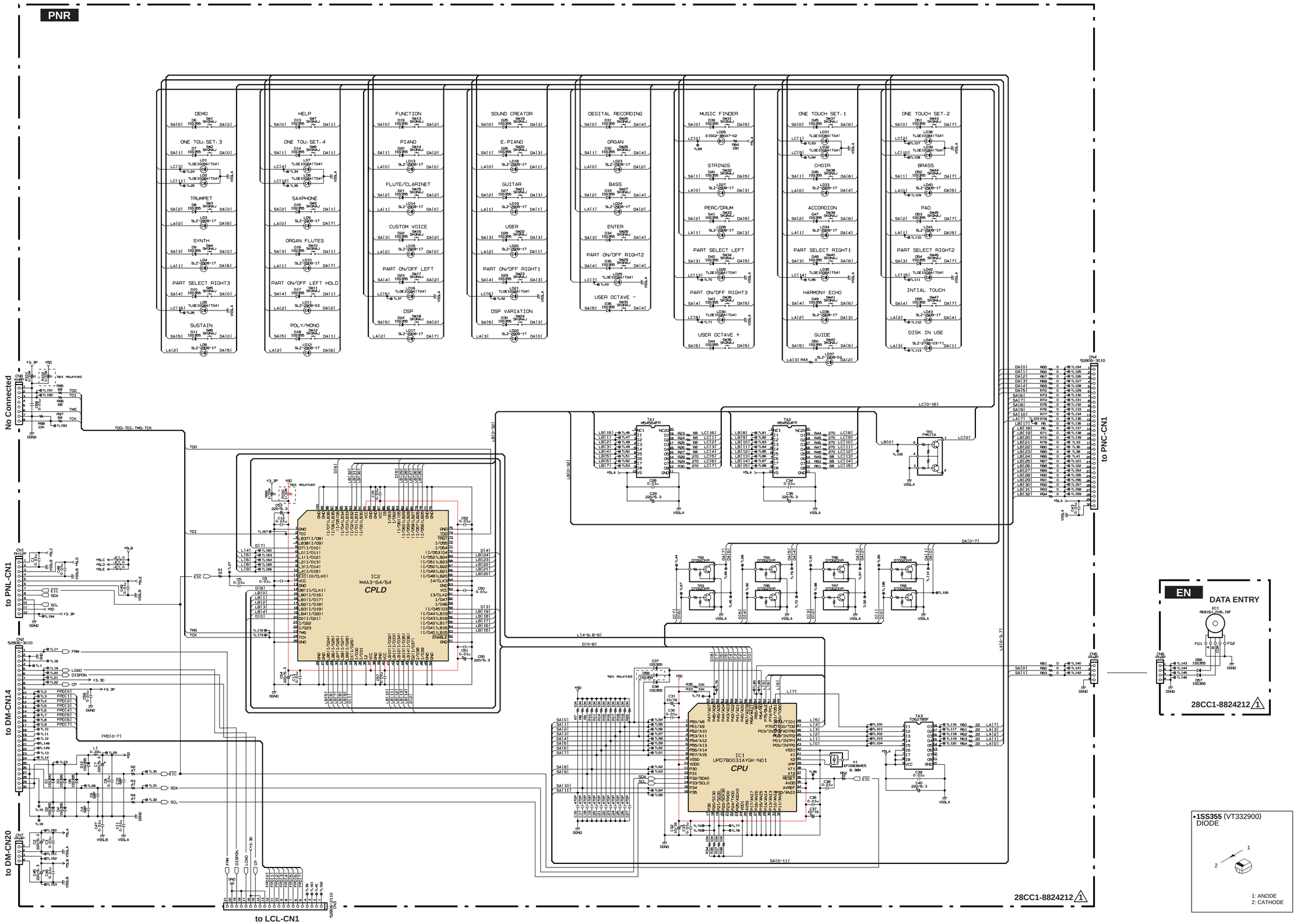

Note: See parts list for details of citcuit baord component parts.

Tyros

■ Tyros OVERALL CIRCUIT DIAGRAM 8/10 (AJACK, REG, INLET, PHONES, SPOUTL, SPOUTR, MICVR, MICVRSUB)

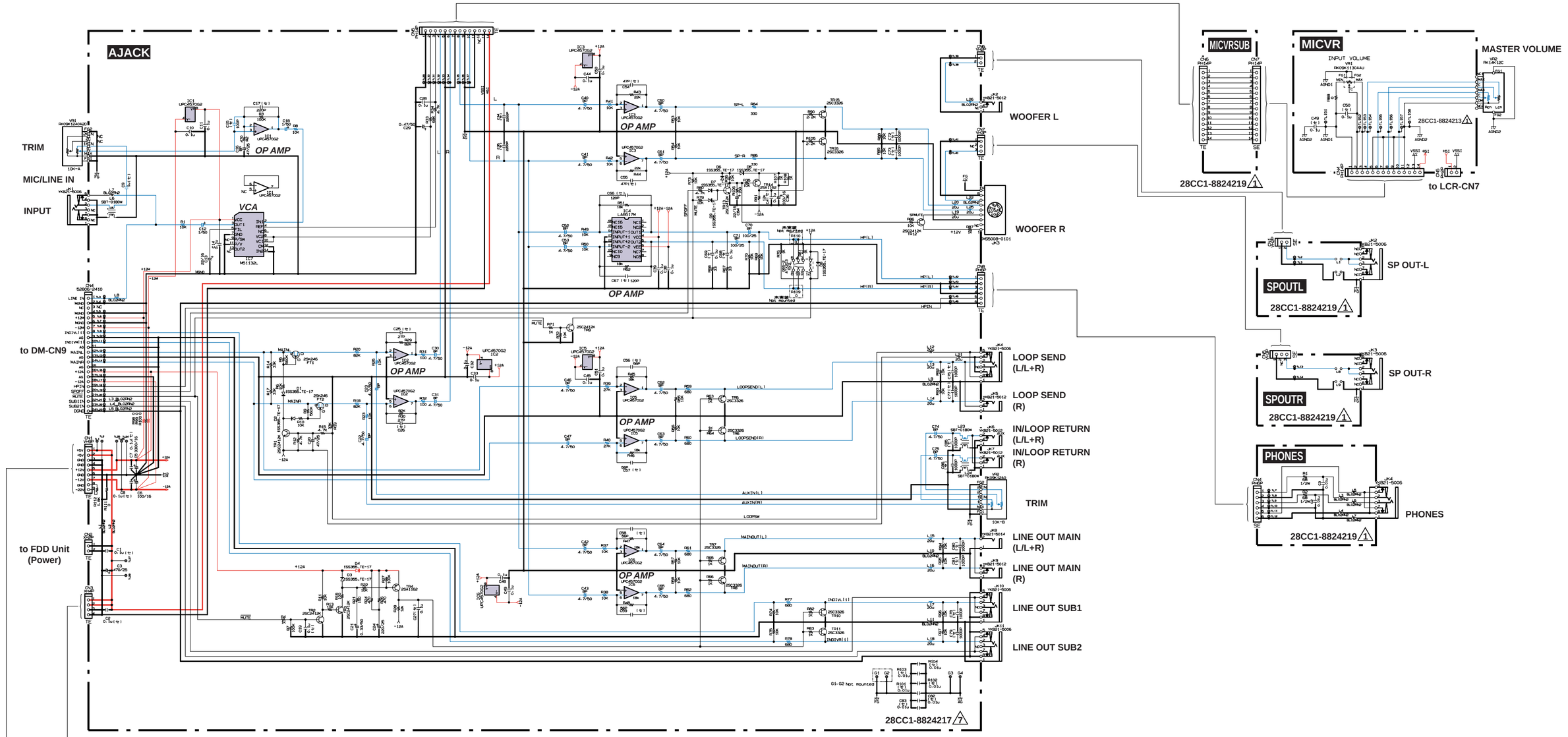

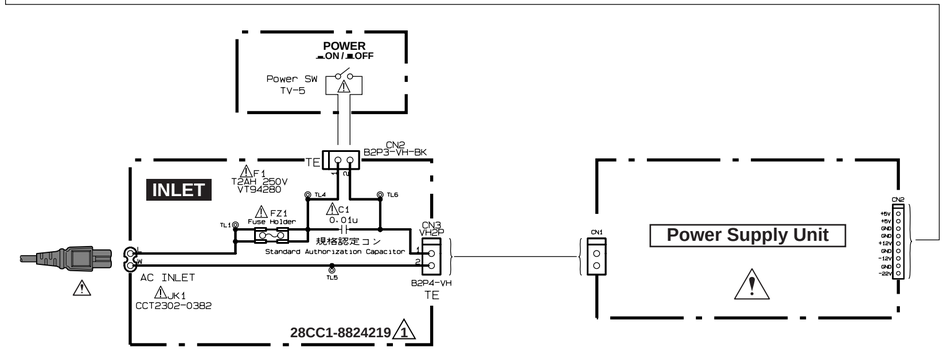

＊ The Umodel is a polarized type.

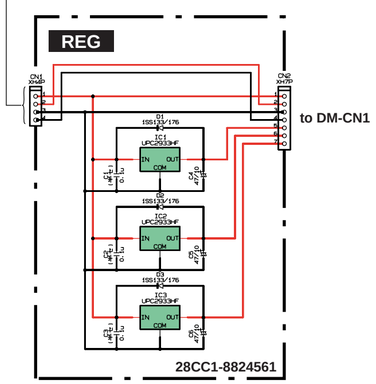

• µPC2933HF (XW196A00) REGULATOR +3.3V REG: IC1, IC2, IC3	• 1SS355 (VT332900) DIODE
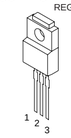 1: INPUT 2: COMMON 3: OUTPUT	1: ANODE 2: CATHODE

■ WARNING
Components having special characteristics are maked ⚠ and must be replaced with parts having specification equal to those originally installed.

(セ) : Ceramic Capacitor
(規格認定コン) : Capacitor

Note: See parts list for details of citcuit baord component parts.

■ Tyros OVERALL CIRCUIT DIAGRAM 9/10 (PNC, LCL, LCR)

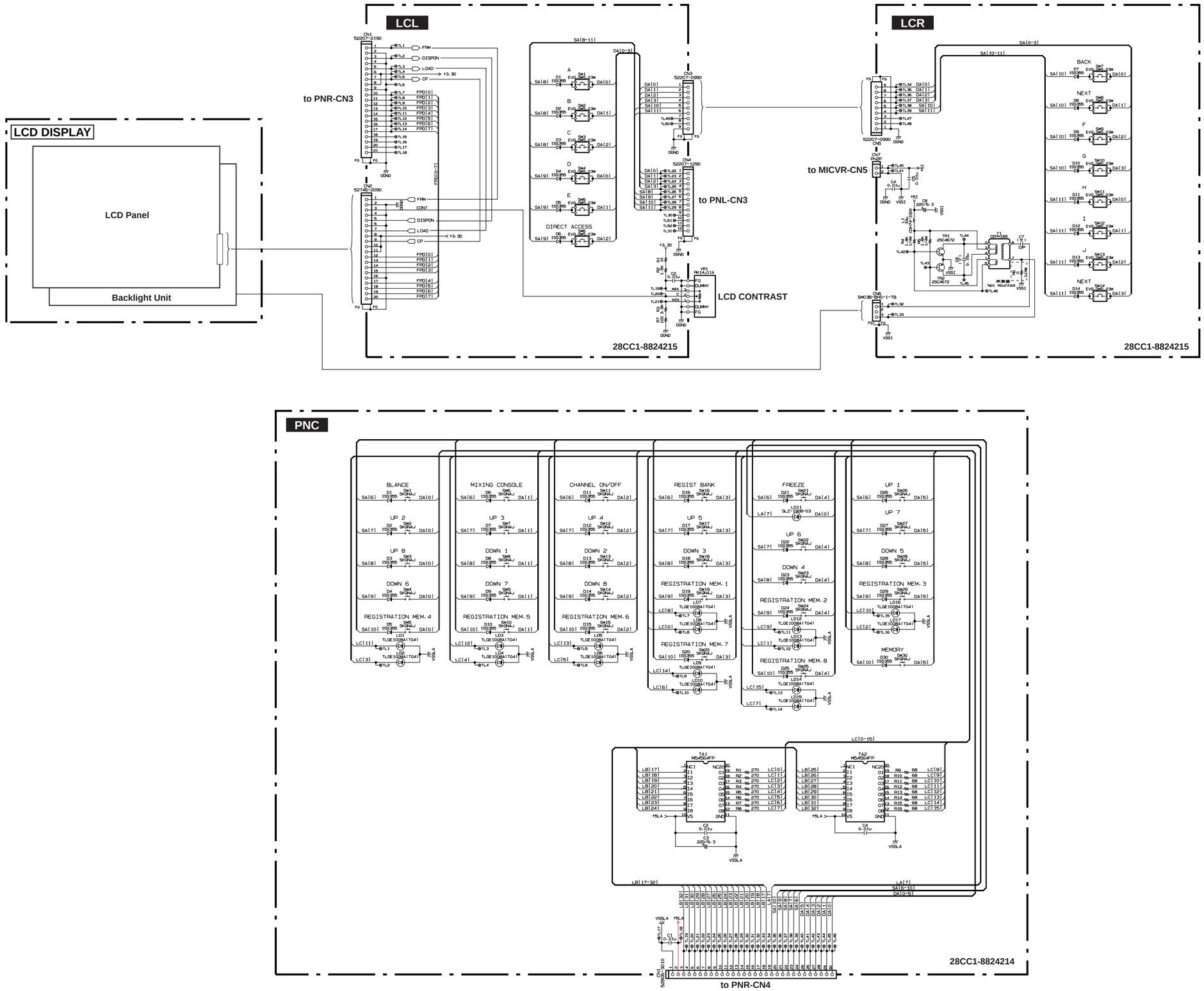

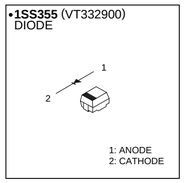

Note: See parts list for details of citcuit baord component parts.

■ Tyros OVERALL CIRCUIT DIAGRAM 10/10 (DJACK, EMKS-N, PC, 61H, 61L)

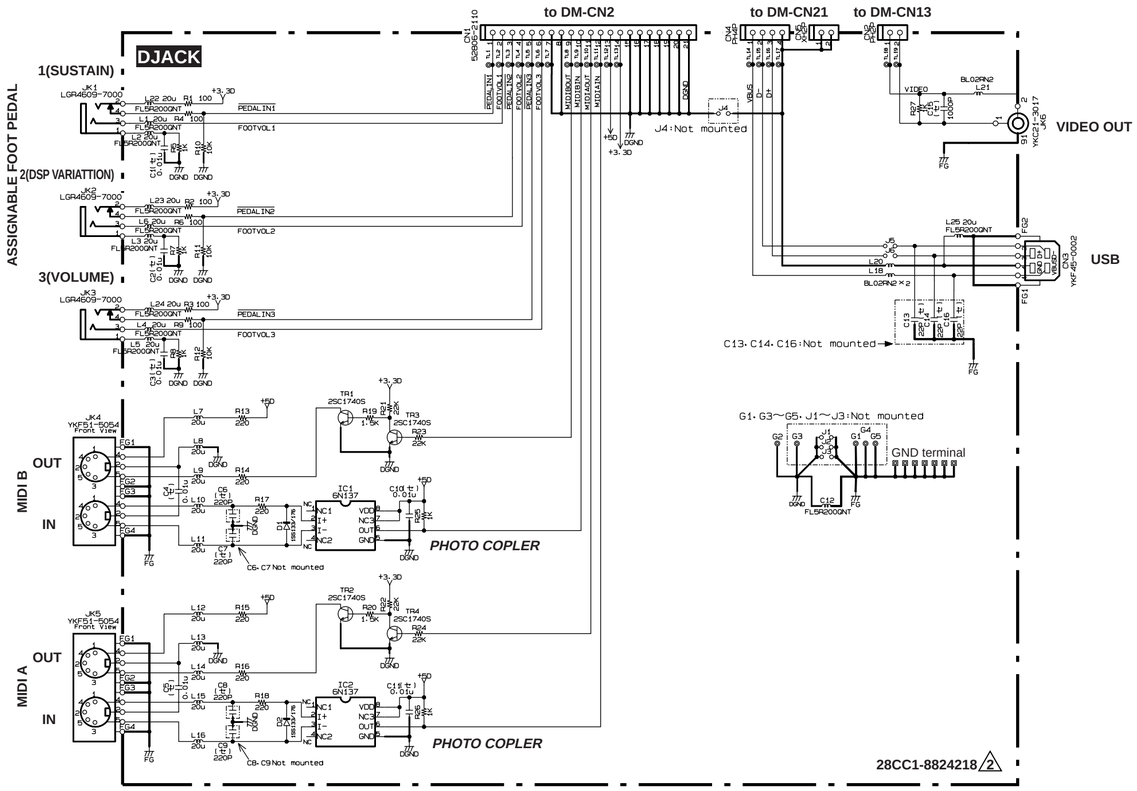

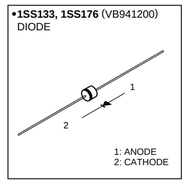

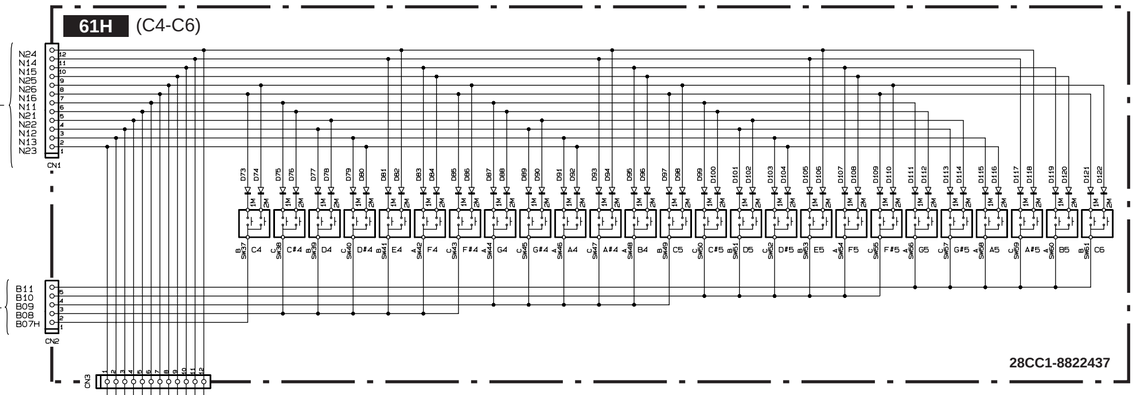

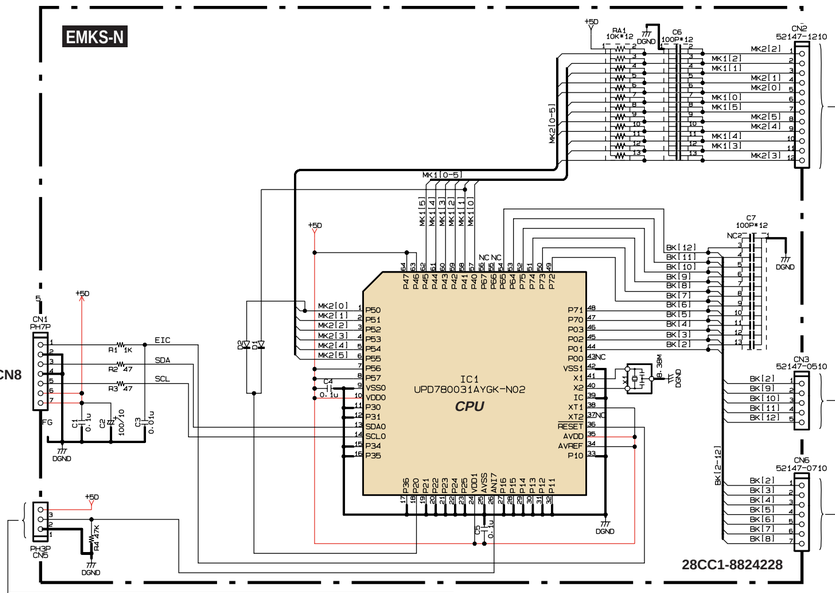

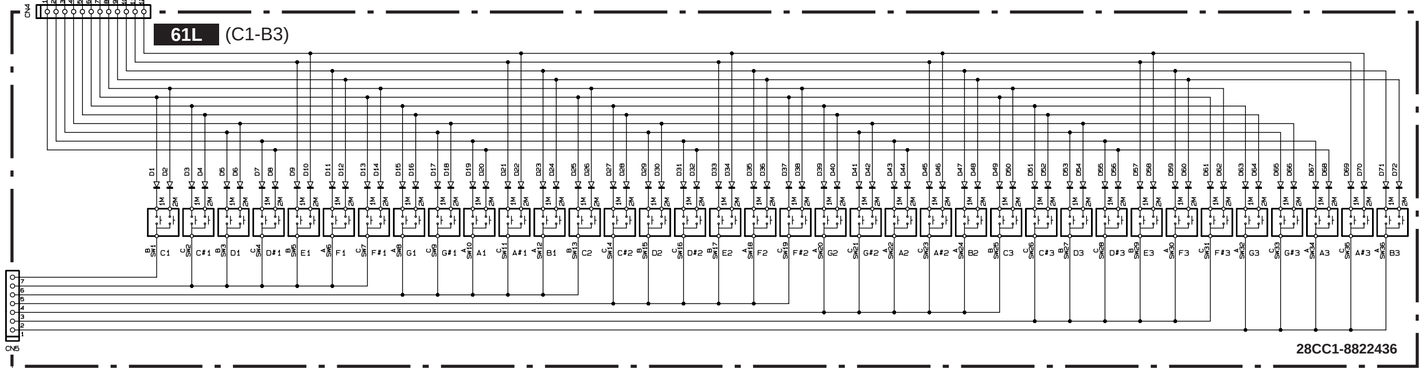

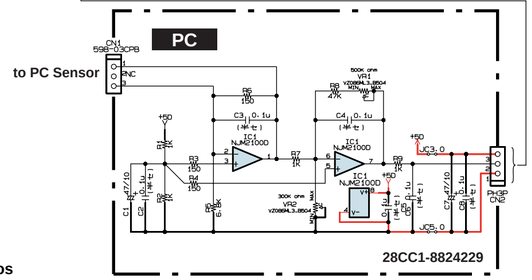

（セ）： Ceramic Capacitor
（半セ）： Electrolytic Capacitor

Note: See parts list for details of circuit baord component parts.